1. ALL RESISTANCE VALUES ARE IN OHMS, 0.1 WATT +/- 5%.
2. ALL CAPACITANCE VALUES ARE IN MICROFARADS.
3. ALL CRYSTALS & OSCILLATOR VALUES ARE IN HERTZ.

M39 - DVT

11/16/05

REV	ZONE	ECN	DESCRIPTION OF CHANGE	CK APPD / DATE	ENG APPD / DATE
06		400374	ENGINEERING RELEASED	09/16/05	06/22/04

PAGE	DRI	PDF	CIRCUIT
1	JD	JD 1	TABLE OF CONTENTS
2	JD	JD 2	SYSTEM BLOCK DIAGRAM
3	RT	RT 3	POWER BLOCK DIAGRAM
4	JD	JD 4	TABLE ITEMS & REVISION HISTORY
5	JD	JD 5	FUNC TEST
6	RT	RT 6	POWER CONNECTOR / POWER ALIAS
(M42) 7	MS	JD 7	CPU - BUS INTERFACE
(M42) 8	MS	JD 8	CPU - PWR & GND
9	MS	JD 9	CPU - DECAPS
(M42) 10	MS	JD 10	CPU - THERMAL SENSOR
M42 11	MS	JD 11	CPU - ITP CONN
M1 12	PS	JH 12	NB - CPU INTERFACE
M1 13	PS	JH 13	NB - VIDEO INTERFACE
14	PS	JH 14	NB - MISC INTERFACES
M1 15	PS	JH 15	NB - DDR2 INTERFACE
M1 16	PS	JH 16	NB - POWER 1
M1 17	PS	JH 17	NB - POWER 2
M1 18	PS	JH 18	NB - GROUNDS
19	PS	JH 19	NB - DECAPS
M1 20	PS	JH 20	NB - CONFIG STRAPS
21	JD	JD 21	SB - RTC,LAN,AUDIO,ATA,CPU,LPC
22	JD	JD 22	SB - PCIE,SPI,USB,DMI,PCI
23	JD	JD 23	SB - SMB,GPIO,PM,CLKS
24	JD	JD 24	SB - POWERS AND GROUNDS
25	JD	JD 25	SB - DECAPS
26	JD	JD 26	SB - MISC
27	JD	JD 27	SB - SMB BUS CONNECTIONS
28	PS	JD 28	DDR2 - SO-DIMM CONN A
29	PS	JD 29	DDR2 - SO-DIMM CONN B (REVERSED)
30	PS	JD 30	DDR2 - TERMINATION
M1 31	RT	RT 31	DDR2 - VTT SUPPLY
M42 33	JD	JD 32	CLOCKS - GENERATOR
34	JD	JD 33	CLOCKS - TERMINATIONS
38	JD	JD 34	ATA (SATA AND IDE) CONN'S
(M42) 41	JD	JD 35	LAN - YUKON'S PCIE INTERFACE
42	JD	JD 36	LAN - YUKON'S PWR, MISC
43	JD	JD 37	LAN - CONN
44	JD	JD 38	FIREWIRE - FW323-06
45	JD	JD 39	FIREWIRE - DECAPS
46	JD	JD 40	FIREWIRE - CONN'S
47	JD	JD 41	USB - CONN'S
49	JD	JD 42	USB - FLASH CONN
53	JD	JD 43	PCI-E - AIRPORT MINI-PCIE CONN
54	JD	JD 44	PCI-E - UNUSED PORTS
58	MS	MS 45	SMC - H8S2116
59	MS	MS 46	SMC - SMB BUSSES, MISC
60	MS	MS 47	SMC - LPC+ CONN
61	JH	JH 48	SMC - GPU/NB THERMAL SENSOR
RX 63	MS	JD 49	SMC - SPI BOOTROM
65	MS	MS 50	SMC - FANS
66	MS	MS 51	SMC - FANS
67	JD	JD 52	SMC - TPM
SO 68	PT	JD 53	AUDIO - CODEC,VREG,MIC BIAS
SO 72	PT	JD 54	AUDIO - INTERNAL SPEAKER AMP
SO 73	PT	JD 55	AUDIO - I/O CONN'S,EMC
SO 74	PT	JD 56	AUDIO - DETECT TRANSLATORS
RP 75	RT	RT 57	VR - CPU CORE
RP 76	RT	RT 58	VR - CPU I-V SENSE CKT
RP 77	RT	RT 59	VR - "S0" 1.2V & 2.5V (GRAFIX)
RP 78	RT	RT 60	VR - "S0" 1.8V
RP 79	RT	RT 61	VR - "S3" 1.8V
RP 80	RT	RT 62	VR - "S0" 1.5V
RP 81	RT	RT 63	VR - "S0" 1.05V
RP 83	RT	RT 64	VR - "S3" 3.3V AND 5V
JH 84	JH	JH 65	GPU - M56 PCI-E
M1 85	JH	JH 66	GPU - VCORE SUPPLY
M1 86	JH	JH 67	GPU - M56 CORE PWR
M1 87	JH	JH 68	GPU - M56 FRAME BUFFER
M1 88	JH	JH 69	GPU - MISC
M1 89	JH	JH 70	GPU - GDDR SDRAM A
M1 90	JH	JH 71	GPU - GDDR SDRAM B
M1 91	JH	JH 72	GPU - M56 GPIO,DVO,MISC
M1 92	JH	JH 73	GPU - M56 CLOCKS
M1 93	JH	JH 74	GPU - M56 VIDEO INTERFACES
JH 94	JH	JH 75	GPU - INTERNAL DISPLAY CONN'S
JH 95	JH	JH 76	GPU - TP'S
JH 96	JH	JH 77	GPU - TMDS,INVERTER,EXT VGA
JH 97	JH	JH 78	GPU - EXTERNAL DISPLAY CONN'S

DIMENSIONS ARE IN MILLIMETERS
XX ±
X.XX ±
X.XXX ±
ANGLES ±
DO NOT SCALE DRAWING

THIRD ANGLE PROJECTION

METRIC

DRAFTER / DESIGN CK / ENG APPD / MFG APPD / QA APPD / DESIGNER / RELEASE / SCALE NONE

MATERIAL/FINISH NOTED AS APPLICABLE

SIZE D

Apple Computer Inc.

NOTICE OF PROPRIETARY PROPERTY

THE INFORMATION CONTAINED HEREIN IS THE PROPRIETARY PROPERTY OF APPLE COMPUTER, INC. THE POSSESSOR AGREES TO THE FOLLOWING

I TO MAINTAIN THE DOCUMENT IN CONFIDENCE
II NOT TO REPRODUCE OR COPY IT
III NOT TO REVEAL OR PUBLISH IN WHOLE OR PART

TITLE SCHEM,M39

DRAWING NUMBER 051-6950 REV. 06

SHT 1 OF 111

www.teknisi-indonesia.com

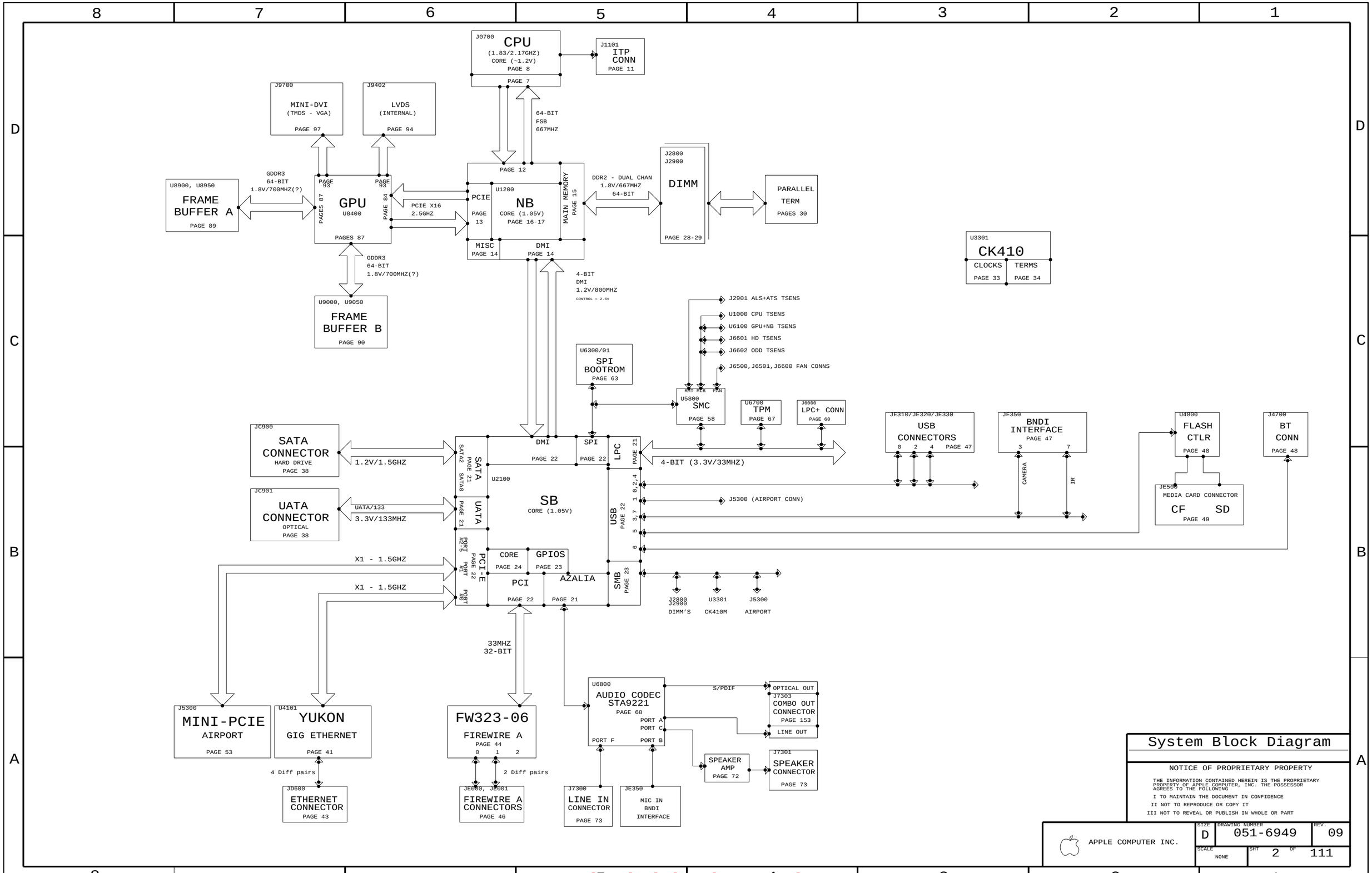

System Block Diagram

NOTICE OF PROPRIETARY PROPERTY

THE INFORMATION CONTAINED HEREIN IS THE PROPRIETARY PROPERTY OF APPLE COMPUTER, INC. THE POSSESSOR AGREES TO THE FOLLOWING

I TO MAINTAIN THE DOCUMENT IN CONFIDENCE

II NOT TO REPRODUCE OR COPY IT

III NOT TO REVEAL OR PUBLISH IN WHOLE OR PART

APPLE COMPUTER INC.

SIZE	DRAWING NUMBER	REV.
D	051-6949	09
SCALE NONE	SHT 2 OF 111	

www.teknisi-indonesia.com

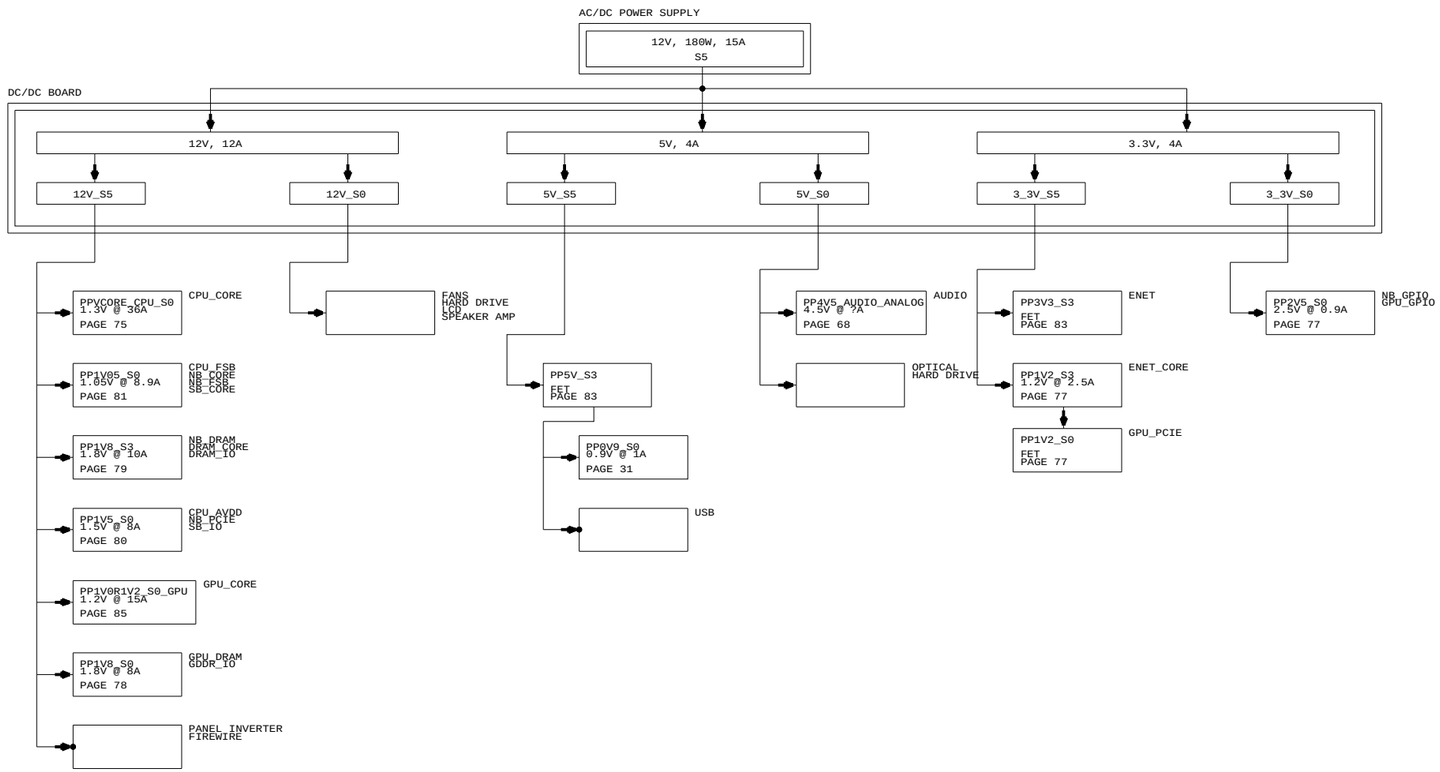

Power Block Diagram

NOTICE OF PROPRIETARY PROPERTY

THE INFORMATION CONTAINED HEREIN IS THE PROPRIETARY PROPERTY OF APPLE COMPUTER, INC. THE POSSESSOR AGREES TO THE FOLLOWING

I TO MAINTAIN THE DOCUMENT IN CONFIDENCE
II NOT TO REPRODUCE OR COPY IT
III NOT TO REVEAL OR PUBLISH IN WHOLE OR PART

APPLE COMPUTER INC.

SIZE	DRAWING NUMBER	REV.
D	051-6949	09
SCALE NONE	SHT 3 OF 111	

www.teknisi-indonesia.com

COMMON

	PART#	QTY	DESCRIPTION	REFERENCE DESIGNATOR(S)	CRITICAL	BOM OPTION
	511S0025	1	IC,CPU-SKT,479BGA	J0700	CRITICAL	
	338S0269	1	IC,945GM,NORTHBRIDGE	U1200	CRITICAL	
	343S0385	1	IC,SB,652BGA	U2100	CRITICAL	
	742-0048	1	BAT,COIN,3V,220MAH,CR2032	BT2600	CRITICAL	
	359S0101	1	IC,CY28445-5,CLK GEN,68PIN QFN	U3301	CRITICAL	
	338S0270	1	IC,88E8053,GIGABIT ENET XCVR,64P QFN,NO	U4101	CRITICAL	
(335S0382)	341S1797	1	IC,ENET LAN ROM	U4102	CRITICAL	
	338S0279	1	IC,FW32306,1394A LINK,TQFP	U4400	CRITICAL	
	338S0274	1	IC,SMC,HS8/2116,BLANK	U5800	CRITICAL	
	341S1789	1	IC,TPM,TSSOP,28P	U6700	CRITICAL	LEMENU
	353S1235	1	IC,CPU VREG,IMVP,TWO PHASE	U7500	CRITICAL	
	338S0266	1	IC,ATI,M56P,GRAFIX CTLR,880BGA,LF	U8400	CRITICAL	ATI_B24
	338S0305	1	IC,ATI,M56P,GRAFIX CTLR,880BGA,LF	U8400	CRITICAL	ATI_A24
	128S0078	3	CAP,EL,AL,330UF,20%,16V,10X12.7MM,SMD,LF	C7517,C7518,C7910	CRITICAL	

PART NUMBER	ALTERNATE FOR PART NUMBER	BOM OPTION	REF DES	COMMENTS:
126S0096	126S0076		C7801	SANYO W16CE680KX 680UF 16V LF
126S0086	126S0078		C699,C940,C1900,C1901,C1968	SANYO W6CE330FS 330UF 6.3V LF
128S0080	128S0078		C7517,C7518,C7910	SANYO 16SVP330M 330UF 16V SMD LF
197S0177	197S0020		Y4101	XTAL,25MHZ,50PPM,16PF,3.2X2.5 SMD,LF
338S0302	338S0266		U8400	IC,ATI,M36D,GRAFIX CTLR,880BGA,LF

M38

	PART#	QTY	DESCRIPTION	REFERENCE DESIGNATOR(S)	CRITICAL	BOM OPTION
	051-6949	1	PCB,SCHEM,MLB,M38	SCH1		17_INCH_LCD
	820-1919	1	PCB,FAB,MLB,M38	MLB1		17_INCH_LCD
(335S0384)	341T0003	1	EFI ROM,M38	U6301	CRITICAL	17_INCH_LCD
	337S3241	1	M38/M39 LOW-SPEED CPU (QINY)	CPU	CRITICAL	CPU_M38
	337S3242	1	M00-SPEED CPU (QINZ)	CPU	CRITICAL	CPU_M00

M39

	PART#	QTY	DESCRIPTION	REFERENCE DESIGNATOR(S)	CRITICAL	BOM OPTION
	051-6950	1	PCB,SCHEM,MLB,M39	SCH1		20_INCH_LCD
	820-1888	1	PCB,FAB,MLB,M39	MLB1		20_INCH_LCD
(335S0384)	341T0004	1	EFI ROM,M39	U6301	CRITICAL	20_INCH_LCD
	337S3243	1	M39 HI-SPEED CPU (QHJJ)	CPU	CRITICAL	CPU_M39

M38 / M39

PART#	QTY	DESCRIPTION	REFERENCE DESIGNATOR(S)	CRITICAL	BOM OPTION
333S0354	4	IC,SGRAM,GDDR3,8MX32,700MHZ,136FBGA	U8900,U8950,U9000,U9050	CRITICAL	ATI_FB_128M_SAMSUNG
333S0358	4	IC,SGRAM,GDDR3,8MX32,700MHZ,136FBGA	U8900,U8950,U9000,U9050	CRITICAL	ATI_FB_128M_HYNIX

M39 - CTO

PART#	QTY	DESCRIPTION	REFERENCE DESIGNATOR(S)	CRITICAL	BOM OPTION
333S0350	4	IC,SGRAM,GDDR3,16MX32,700MHZ,136FBGA	U8900,U8950,U9000,U9050	CRITICAL	ATI_FB_256M_SAMSUNG
333S0351	4	IC,SGRAM,GDDR3,16MX32,700MHZ,136FBGA	U8900,U8950,U9000,U9050	CRITICAL	ATI_FB_256M_HYNIX

Table Items

NOTICE OF PROPRIETARY PROPERTY

THE INFORMATION CONTAINED HEREIN IS THE PROPRIETARY PROPERTY OF APPLE COMPUTER, INC. THE POSSESSOR AGREES TO THE FOLLOWING

I TO MAINTAIN THE DOCUMENT IN CONFIDENCE

II NOT TO REPRODUCE OR COPY IT

III NOT TO REVEAL OR PUBLISH IN WHOLE OR PART

APPLE COMPUTER INC.

SIZE	DRAWING NUMBER	REV.
D	051-6949	09
SCALE NONE	SHT 4 OF 111	

www.teknisi-indonesia.com

LAYOUT NOTE: PLACE NEAR J0700

12 7 5	FSB_A_L<6>	PP600	OMIT P4MM
12 7 5	FSB_ADSTB_L<0>	PP601	OMIT P4MM
12 7 5	FSB_A_L<27>	PP602	OMIT P4MM
12 7 5	FSB_ADSTB_L<1>	PP603	OMIT P4MM
12 7 5	FSB_D_L<0>	PP604	OMIT P4MM
12 7 5	FSB_DSTBN_L<0>	PP605	OMIT P4MM
12 7 5	FSB_DSTBP_L<0>	PP606	OMIT P4MM
12 7 5	FSB_DINV_L<0>	PP607	OMIT P4MM
12 7 5	FSB_D_L<16>	PP608	OMIT P4MM
12 7 5	FSB_DSTBN_L<1>	PP609	OMIT P4MM
12 7 5	FSB_DSTBP_L<1>	PP610	OMIT P4MM
12 7 5	FSB_DINV_L<1>	PP611	OMIT P4MM
12 7 5	FSB_D_L<41>	PP612	OMIT P4MM
12 7 5	FSB_DSTBN_L<2>	PP613	OMIT P4MM
12 7 5	FSB_DSTBP_L<2>	PP614	OMIT P4MM
12 7 5	FSB_DINV_L<2>	PP615	OMIT P4MM
12 7 5	FSB_D_L<59>	PP616	OMIT P4MM
12 7 5	FSB_DSTBN_L<3>	PP617	OMIT P4MM
12 7 5	FSB_DSTBP_L<3>	PP618	OMIT P4MM
12 7 5	FSB_DINV_L<3>	PP619	OMIT P4MM
12 7 5	FSB_LOCK_L	PP620	OMIT P4MM
12 11 7	FSB_CPURST_L	PP621	OMIT P4MM
21 7	CPU_INIT_L	PP622	OMIT P4MM
21 7	CPU_A20M_L	PP623	OMIT P4MM
21 7	CPU_IGNNE_L	PP624	OMIT P4MM
21 7	CPU_STPCLK_L	PP625	OMIT P4MM
21 7	CPU_INTR	PP626	OMIT P4MM
21 7	CPU_NMI	PP627	OMIT P4MM
21 7	CPU_SMI_L	PP628	OMIT P4MM
34 7	FSB_CLK_CPU_P	PP629	OMIT P4MM
34 7	FSB_CLK_CPU_N	PP630	OMIT P4MM

LAYOUT NOTE: PLACE NEAR U2100

34 21	SB_CLK100M_SATA_P	PP6C4	OMIT P4MM
34 21	SB_CLK100M_SATA_N	PP6C5	OMIT P4MM
38 21	IDE_PDIOR_L	PP6C6	OMIT P4MM
38 21	IDE_PDIORDY	PP6C7	OMIT P4MM
38 21	IDE_PDD<9>	PP6C8	OMIT P4MM
34 22	PCI_CLK_SB	PP6D0	OMIT P4MM
41 22	PCIE_A_D2R_P	PP6D1	OMIT P4MM
41 22	PCIE_A_D2R_N	PP6D2	OMIT P4MM
53 22	PCIE_B_D2R_P	PP5E1	OMIT P4MM
53 22	PCIE_B_D2R_N	PP5E2	OMIT P4MM
22 14	DMI_N2S_P<0>	PP6D3	OMIT P4MM
22 14	DMI_N2S_N<0>	PP6D4	OMIT P4MM
34 22	SB_CLK100M_DMI_P	PP6D5	OMIT P4MM
34 22	SB_CLK100M_DMI_N	PP6D6	OMIT P4MM
58 26 23	PM_SYSRST_L	PP6D7	OMIT P4MM
58 44 23 67 60	PM_CLKRUN_L	PP6D8	OMIT P4MM
34 23	SB_CLK14P3M_TIMER	PP6D9	OMIT P4MM
34 23	SB_CLK48M_USBCTLR	PP6E0	OMIT P4MM

LAYOUT NOTE: PLACE NEAR U1200

12 7 5	FSB_A_L<6>	PP631	OMIT P4MM
12 7 5	FSB_ADSTB_L<0>	PP632	OMIT P4MM
12 7 5	FSB_A_L<27>	PP633	OMIT P4MM
12 7 5	FSB_ADSTB_L<1>	PP634	OMIT P4MM
12 7 5	FSB_D_L<0>	PP635	OMIT P4MM
12 7 5	FSB_DSTBN_L<0>	PP636	OMIT P4MM
12 7 5	FSB_DSTBP_L<0>	PP637	OMIT P4MM
12 7 5	FSB_DINV_L<0>	PP638	OMIT P4MM
12 7 5	FSB_D_L<16>	PP639	OMIT P4MM
12 7 5	FSB_DSTBN_L<1>	PP640	OMIT P4MM
12 7 5	FSB_DSTBP_L<1>	PP641	OMIT P4MM
12 7 5	FSB_DINV_L<1>	PP642	OMIT P4MM
12 7 5	FSB_D_L<41>	PP643	OMIT P4MM
12 7 5	FSB_DSTBN_L<2>	PP644	OMIT P4MM
12 7 5	FSB_DSTBP_L<2>	PP645	OMIT P4MM
12 7 5	FSB_DINV_L<2>	PP646	OMIT P4MM
12 7 5	FSB_D_L<59>	PP647	OMIT P4MM
12 7 5	FSB_DSTBN_L<3>	PP648	OMIT P4MM
12 7 5	FSB_DSTBP_L<3>	PP649	OMIT P4MM
12 7 5	FSB_DINV_L<3>	PP650	OMIT P4MM
12 7 5	FSB_LOCK_L	PP651	OMIT P4MM
12 7	FSB_HIT_L	PP652	OMIT P4MM
12 7	FSB_HITM_L	PP653	OMIT P4MM
12 7	FSB_BNR_L	PP654	OMIT P4MM
12 7	FSB_BREQ0_L	PP655	OMIT P4MM
12 7	FSB_DBSY_L	PP656	OMIT P4MM
12 7	FSB_DPWR_L	PP657	OMIT P4MM
12 7	FSB_REQ_L<0>	PP658	OMIT P4MM
12 7	FSB_REQ_L<1>	PP659	OMIT P4MM
12 7	FSB_REQ_L<2>	PP660	OMIT P4MM
12 7	FSB_REQ_L<3>	PP661	OMIT P4MM
12 7	FSB_REQ_L<4>	PP662	OMIT P4MM
34 12	FSB_CLK_NB_P	PP663	OMIT P4MM
34 12	FSB_CLK_NB_N	PP664	OMIT P4MM
75 26 14	VR_PWRGOOD_DELAY	PP665	OMIT P4MM
14	NB_RST_IN_L_R	PP666	OMIT P4MM
34 14	NB_CLK100M_GCLKIN_P	PP667	OMIT P4MM
34 14	NB_CLK100M_GCLKIN_N	PP668	OMIT P4MM
22 14	DMI_S2N_N<0>	PP673	OMIT P4MM
22 14	DMI_S2N_P<0>	PP674	OMIT P4MM
19 14	MEM_VREF_NB_0	PP6E1	OMIT P4MM
19 14	MEM_VREF_NB_1	PP675	OMIT P4MM
28 15	MEM_A_DQ<7>	PP676	OMIT P4MM
28 15	MEM_A_DQ<14>	PP677	OMIT P4MM
28 15	MEM_A_DQ<16>	PP678	OMIT P4MM
28 15	MEM_A_DQ<25>	PP679	OMIT P4MM
28 15	MEM_A_DQ<39>	PP680	OMIT P4MM
28 15	MEM_A_DQ<47>	PP681	OMIT P4MM
28 15	MEM_A_DQ<54>	PP682	OMIT P4MM
28 15	MEM_A_DQ<59>	PP683	OMIT P4MM
29 15	MEM_A_DQS_P<0>	PP684	OMIT P4MM
29 15	MEM_A_DQS_N<0>	PP685	OMIT P4MM
28 15	MEM_A_DQS_P<1>	PP686	OMIT P4MM
28 15	MEM_A_DQS_N<1>	PP687	OMIT P4MM
28 15	MEM_A_DQS_P<2>	PP688	OMIT P4MM
28 15	MEM_A_DQS_N<2>	PP689	OMIT P4MM
28 15	MEM_A_DQS_P<3>	PP690	OMIT P4MM
28 15	MEM_A_DQS_N<3>	PP691	OMIT P4MM
28 15	MEM_A_DQS_P<4>	PP692	OMIT P4MM
28 15	MEM_A_DQS_N<4>	PP693	OMIT P4MM
28 15	MEM_A_DQS_P<5>	PP694	OMIT P4MM
28 15	MEM_A_DQS_N<5>	PP695	OMIT P4MM
28 15	MEM_A_DQS_P<6>	PP696	OMIT P4MM
28 15	MEM_A_DQS_N<6>	PP697	OMIT P4MM
28 15	MEM_A_DQS_P<7>	PP698	OMIT P4MM
28 15	MEM_A_DQS_N<7>	PP699	OMIT P4MM
29 15	MEM_B_DQ<6>	PP6A0	OMIT P4MM
29 15	MEM_B_DQ<8>	PP6A1	OMIT P4MM
29 15	MEM_B_DQ<23>	PP6A2	OMIT P4MM
29 15	MEM_B_DQ<25>	PP6A3	OMIT P4MM
29 15	MEM_B_DQ<38>	PP6A4	OMIT P4MM
29 15	MEM_B_DQ<44>	PP6A5	OMIT P4MM
29 15	MEM_B_DQ<48>	PP6A6	OMIT P4MM
29 15	MEM_B_DQ<62>	PP6A7	OMIT P4MM
29 15	MEM_B_DQS_P<0>	PP6A8	OMIT P4MM
29 15	MEM_B_DQS_N<0>	PP6A9	OMIT P4MM
29 15	MEM_B_DQS_P<1>	PP6B0	OMIT P4MM
29 15	MEM_B_DQS_N<1>	PP6B1	OMIT P4MM
29 15	MEM_B_DQS_P<2>	PP6B2	OMIT P4MM
29 15	MEM_B_DQS_N<2>	PP6B3	OMIT P4MM
29 15	MEM_B_DQS_P<3>	PP6B4	OMIT P4MM
29 15	MEM_B_DQS_N<3>	PP6B5	OMIT P4MM
29 15	MEM_B_DQS_P<4>	PP6B6	OMIT P4MM
29 15	MEM_B_DQS_N<4>	PP6B7	OMIT P4MM
29 15	MEM_B_DQS_P<5>	PP6B8	OMIT P4MM
29 15	MEM_B_DQS_N<5>	PP6B9	OMIT P4MM
29 15	MEM_B_DQS_P<6>	PP6C0	OMIT P4MM
29 15	MEM_B_DQS_N<6>	PP6C1	OMIT P4MM
29 15	MEM_B_DQS_P<7>	PP6C2	OMIT P4MM
29 15	MEM_B_DQS_N<7>	PP6C3	OMIT P4MM

LAYOUT NOTE: PLACE NEAR U8400

89 87 5	FB_A_DQ<0>	PP8700	OMIT P4MM
89 87 5	FB_A_DQ<8>	PP8701	OMIT P4MM
89 87 5	FB_A_DQ<16>	PP8702	OMIT P4MM
89 87 5	FB_A_DQ<24>	PP8703	OMIT P4MM
89 87 5	FB_A_DQ<32>	PP8704	OMIT P4MM
89 87 5	FB_A_DQ<40>	PP8705	OMIT P4MM
89 87 5	FB_A_DQ<48>	PP8706	OMIT P4MM
89 87 5	FB_A_DQ<56>	PP8707	OMIT P4MM
89 87 5	FB_A_MA<3>	PP8708	OMIT P4MM
89 87	FB_A_RDQS<0>	PP8709	OMIT P4MM
89 87	FB_A_RDQS<1>	PP8710	OMIT P4MM
89 87	FB_A_RDQS<2>	PP8711	OMIT P4MM
89 87	FB_A_RDQS<3>	PP8712	OMIT P4MM
89 87	FB_A_RDQS<4>	PP8713	OMIT P4MM
89 87	FB_A_RDQS<5>	PP8714	OMIT P4MM
89 87	FB_A_RDQS<6>	PP8715	OMIT P4MM
89 87	FB_A_RDQS<7>	PP8716	OMIT P4MM
90 87 5	FB_B_DQ<0>	PP8720	OMIT P4MM
90 87 5	FB_B_DQ<8>	PP8721	OMIT P4MM
90 87 5	FB_B_DQ<16>	PP8722	OMIT P4MM
90 87 5	FB_B_DQ<24>	PP8723	OMIT P4MM
90 87 5	FB_B_DQ<32>	PP8724	OMIT P4MM
90 87 5	FB_B_DQ<40>	PP8725	OMIT P4MM
90 87 5	FB_B_DQ<48>	PP8726	OMIT P4MM
90 87 5	FB_B_DQ<56>	PP8727	OMIT P4MM
90 87 5	FB_B_MA<3>	PP8728	OMIT P4MM
90 87	FB_B_RDQS<0>	PP8729	OMIT P4MM
90 87	FB_B_RDQS<1>	PP8730	OMIT P4MM
90 87	FB_B_RDQS<2>	PP8731	OMIT P4MM
90 87	FB_B_RDQS<3>	PP8732	OMIT P4MM
90 87	FB_B_RDQS<4>	PP8733	OMIT P4MM
90 87	FB_B_RDQS<5>	PP8734	OMIT P4MM
90 87	FB_B_RDQS<6>	PP8735	OMIT P4MM
90 87	FB_B_RDQS<7>	PP8736	OMIT P4MM
84 34	GPU_CLK100M_PCIE_P	PP8400	OMIT P4MM
84 34	GPU_CLK100M_PCIE_N	PP8401	OMIT P4MM

LAYOUT NOTE: PLACE NEAR U4101

41 34	ENET_CLK100M_PCIE_P	PP4100	OMIT P4MM
41 34	ENET_CLK100M_PCIE_N	PP4101	OMIT P4MM

PLACE NEAR R1210 AND R1211

12	NB_FSB_VREF	PP1200	SM-TP50-TOP
19 12 6	=PP1V05_S0_FSB_NB	PP1201	SM-TP50-TOP
		PP1202	SM-TP50-TOP

PLACE NEAR R0705 AND R0706

59 11 9 8 7 6	=PP1V05_S0_CPU	PP700	SM-TP50-TOP
7	CPU_GTLREF	PP701	SM-TP50-TOP
		PP702	SM-TP50-TOP

PLACE NEAR R2800 AND R2801

29 28 6	=PP1V8_S3_MEM	PP2800	SM-TP50-TOP
29 28	MEM_VREF	PP2801	SM-TP50-TOP
		PP2802	SM-TP50-TOP

79 77 76 66 65 59 26 6	IN	PP3V3_S5	FUNC_TEST=TRUE
83 81 80 79 59 6	IN	PP5V_S5	FUNC_TEST=TRUE
88 83 81 80 79 78 6	IN	PP12V_S5	FUNC_TEST=TRUE
83 81 80 79 59 6	IN	PP1V8_S3	FUNC_TEST=TRUE
79 6	IN	PPVCORE_CPU	FUNC_TEST=TRUE
76 75 6	IN	PP3V3_S5_SB_RTC	FUNC_TEST=TRUE
26 25 24 21	IN	8 TESTPOINTS	FUNC_TEST=TRUE
	IN		FUNC_TEST=TRUE

60 59 58	IN	SMC_TCK	FUNC_TEST=TRUE
60 59 58	IN	SMC_TDI	FUNC_TEST=TRUE
60 59 58	IN	SMC_TDO	FUNC_TEST=TRUE
60 59 58	IN	SMC_TMS	FUNC_TEST=TRUE
60 58	IN	SMC_TRST_L	FUNC_TEST=TRUE
60 59 58	IN	SMC_TX_L	FUNC_TEST=TRUE
60 59 58	IN	SMC_RX_L	FUNC_TEST=TRUE
59	IN	SMC_MANUAL_RST_L	FUNC_TEST=TRUE
59 11 7	IN	XDP_TCK	FUNC_TEST=TRUE
59 11 7	IN	XDP_TDI	FUNC_TEST=TRUE
59 11 7	IN	XDP_TDO	FUNC_TEST=TRUE
59 11 7	IN	XDP_TMS	FUNC_TEST=TRUE
59 11 7	IN	XDP_TRST_L	FUNC_TEST=TRUE
59	IN	POWER_BUTTON_L	FUNC_TEST=TRUE
26	IN	SW_RST_BTN_L	FUNC_TEST=TRUE

MISC GROUND VIAS

ZH500 HOLE-VIA	ZH510 HOLE-VIA	ZH520 HOLE-VIA
ZH501 HOLE-VIA	ZH511 HOLE-VIA	ZH521 HOLE-VIA
ZH502 HOLE-VIA	ZH512 HOLE-VIA	ZH522 HOLE-VIA
ZH503 HOLE-VIA	ZH513 HOLE-VIA	ZH523 HOLE-VIA
ZH504 HOLE-VIA	ZH514 HOLE-VIA	ZH524 HOLE-VIA
ZH505 HOLE-VIA	ZH515 HOLE-VIA	ZH525 HOLE-VIA
ZH506 HOLE-VIA	ZH516 HOLE-VIA	ZH526 HOLE-VIA
ZH507 HOLE-VIA	ZH517 HOLE-VIA	ZH527 HOLE-VIA
ZH508 HOLE-VIA	ZH518 HOLE-VIA	ZH528 HOLE-VIA
ZH509 HOLE-VIA	ZH519 HOLE-VIA	ZH529 HOLE-VIA

34	IN	TP_PCI_CLK_SPARE	NO_TEST=TRUE
29	IN	TP_MEM_B_A<14>	NO_TEST=TRUE
29	IN	TP_MEM_B_A<15>	NO_TEST=TRUE

PLACE NEAR U8900

89 87	FB_A_CKE<0>	PP8900	OMIT P4MM
89 87	FB_A_CLK_P<0>	PP8901	OMIT P4MM
89 87	FB_A_CLK_N<0>	PP8902	OMIT P4MM
89 87	FB_A_CS_L<0>	PP8903	OMIT P4MM
89 87	FB_A_WE_L<0>	PP8904	OMIT P4MM
89 87	FB_A_CAS_L<0>	PP8905	OMIT P4MM
89 87 5	FB_A_MA<3>	PP8906	OMIT P4MM
89 87	FB_A_RAS_L<0>	PP8907	OMIT P4MM
90 89 88 5	DRAM_RST	PP8908	OMIT P4MM
89 87	FB_A_WDQS<0>	PP8909	OMIT P4MM
89 87	FB_A_WDQS<1>	PP8910	OMIT P4MM
89 87	FB_A_WDQS<3>	PP8911	OMIT P4MM
89 87	FB_A_WDQS<2>	PP8912	OMIT P4MM
89 87 5	FB_A_DQ<0>	PP8913	OMIT P4MM
89 87 5	FB_A_DQ<8>	PP8914	OMIT P4MM
89 87 5	FB_A_DQ<16>	PP8915	OMIT P4MM
89 87 5	FB_A_DQ<24>	PP8916	OMIT P4MM

PLACE NEAR U9000

90 87	FB_B_CKE<0>	PP9000	OMIT P4MM
90 87	FB_B_CLK_P<0>	PP9001	OMIT P4MM
90 87	FB_B_CLK_N<0>	PP9002	OMIT P4MM
90 87	FB_B_CS_L<0>	PP9003	OMIT P4MM
90 87	FB_B_WE_L<0>	PP9004	OMIT P4MM
90 87	FB_B_CAS_L<0>	PP9005	OMIT P4MM
90 87	FB_B_RAS_L<0>	PP9006	OMIT P4MM
90 87 5	FB_B_MA<3>	PP9007	OMIT P4MM
90 89 88 5	DRAM_RST	PP9008	OMIT P4MM
90 87	FB_B_WDQS<0>	PP9009	OMIT P4MM
90 87	FB_B_WDQS<1>	PP9010	OMIT P4MM
90 87	FB_B_WDQS<3>	PP9011	OMIT P4MM
90 87	FB_B_WDQS<2>	PP9012	OMIT P4MM
90 87 5	FB_B_DQ<0>	PP9013	OMIT P4MM
90 87 5	FB_B_DQ<8>	PP9014	OMIT P4MM
90 87 5	FB_B_DQ<16>	PP9015	OMIT P4MM
90 87 5	FB_B_DQ<24>	PP9016	OMIT P4MM

PLACE NEAR U8950

89 87	FB_A_CKE<1>	PP8920	OMIT P4MM
89 87	FB_A_CLK_P<1>	PP8921	OMIT P4MM
89 87	FB_A_CLK_N<1>	PP8922	OMIT P4MM
89 87	FB_A_CS_L<1>	PP8923	OMIT P4MM
89 87	FB_A_WE_L<1>	PP8924	OMIT P4MM
89 87	FB_A_CAS_L<1>	PP8925	OMIT P4MM
89 87	FB_A_RAS_L<1>	PP8926	OMIT P4MM
89 87 5	FB_A_MA<3>	PP8927	OMIT P4MM
90 89 88 5	DRAM_RST	PP8928	OMIT P4MM
89 87	FB_A_WDQS<5>	PP8929	OMIT P4MM
89 87	FB_A_WDQS<6>	PP8930	OMIT P4MM
89 87	FB_A_WDQS<4>	PP8931	OMIT P4MM
89 87	FB_A_WDQS<7>	PP8932	OMIT P4MM
89 87 5	FB_A_DQ<32>	PP8933	OMIT P4MM
89 87 5	FB_A_DQ<40>	PP8934	OMIT P4MM
89 87 5	FB_A_DQ<48>	PP8935	OMIT P4MM
89 87 5	FB_A_DQ<56>	PP8936	OMIT P4MM

PLACE NEAR U9050

90 87	FB_B_CKE<1>	PP9020	OMIT P4MM
90 87	FB_B_CLK_P<1>	PP9021	OMIT P4MM
90 87	FB_B_CLK_N<1>	PP9022	OMIT P4MM
90 87	FB_B_CS_L<1>	PP9023	OMIT P4MM
90 87	FB_B_WE_L<1>	PP9024	OMIT P4MM
90 87	FB_B_CAS_L<1>	PP9025	OMIT P4MM
90 87	FB_B_RAS_L<1>	PP9026	OMIT P4MM
90 87 5	FB_B_MA<3>	PP9027	OMIT P4MM
90 89 88 5	DRAM_RST	PP9028	OMIT P4MM
90 87	FB_B_WDQS<5>	PP9029	OMIT P4MM
90 87	FB_B_WDQS<6>	PP9030	OMIT P4MM
90 87	FB_B_WDQS<7>	PP9031	OMIT P4MM
90 87	FB_B_WDQS<4>	PP9032	OMIT P4MM
90 87 5	FB_B_DQ<32>	PP9033	OMIT P4MM
90 87 5	FB_B_DQ<40>	PP9034	OMIT P4MM
90 87 5	FB_B_DQ<48>	PP9035	OMIT P4MM
90 87 5	FB_B_DQ<56>	PP9036	OMIT P4MM

FUNC TEST 1 OF 2

NOTICE OF PROPRIETARY PROPERTY

THE INFORMATION CONTAINED HEREIN IS THE PROPRIETARY PROPERTY OF APPLE COMPUTER, INC. THE POSSESSOR AGREES TO THE FOLLOWING

I TO MAINTAIN THE DOCUMENT IN CONFIDENCE

II NOT TO REPRODUCE OR COPY IT

III NOT TO REVEAL OR PUBLISH IN WHOLE OR PART

APPLE COMPUTER INC.

SIZE	DRAWING NUMBER	REV.
D	051-6949	09

SCALE NONE | SHT 5 OF 111

www.teknisi-indonesia.com

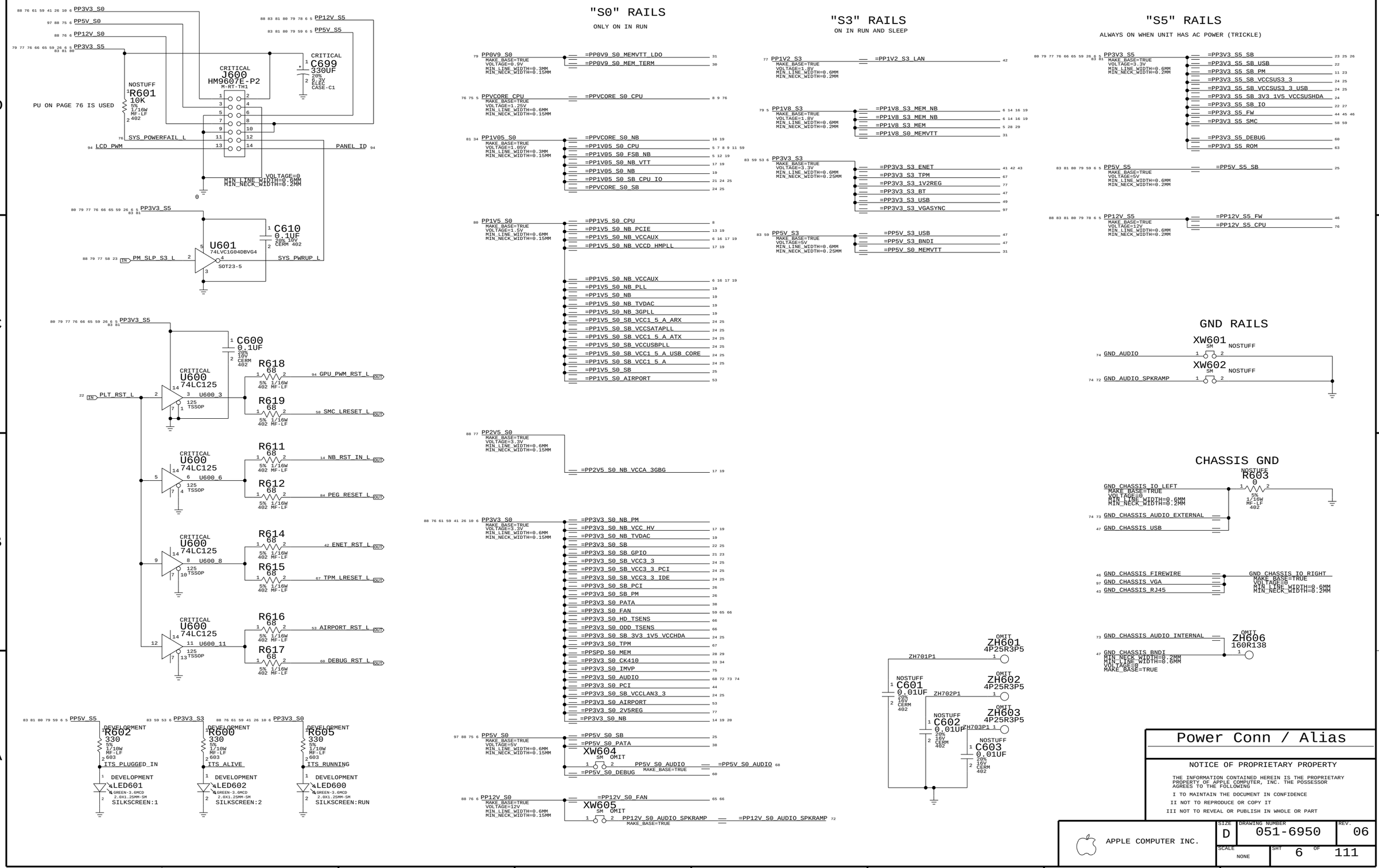

www.teknisi-indonesia.com

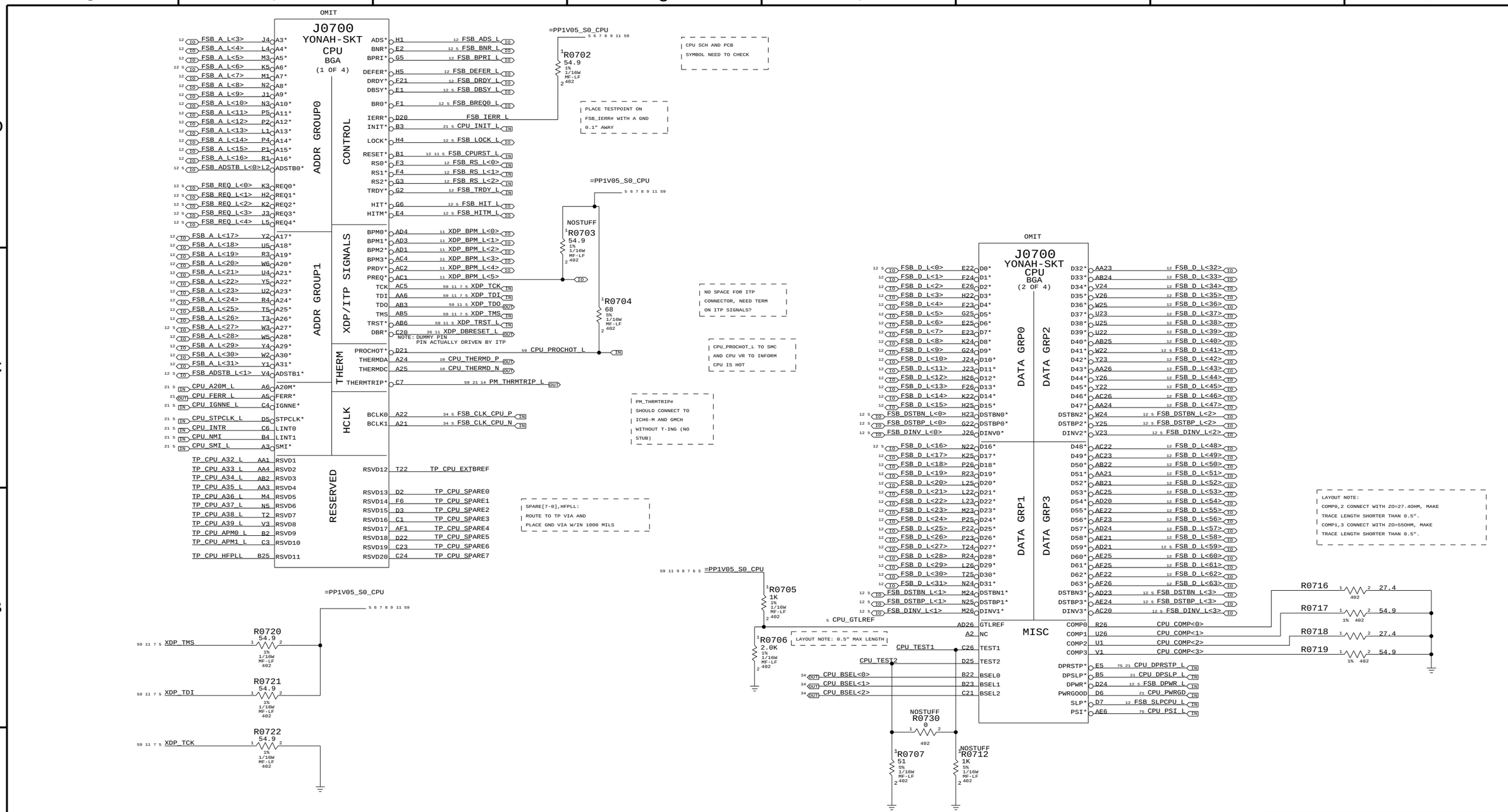

CPU 1 OF 2-FSB

SYNC_MASTER=MASTER SYNC_DATE=05/03/2005

NOTICE OF PROPRIETARY PROPERTY

THE INFORMATION CONTAINED HEREIN IS THE PROPRIETARY PROPERTY OF APPLE COMPUTER, INC. THE POSSESSOR AGREES TO THE FOLLOWING

I TO MAINTAIN THE DOCUMENT IN CONFIDENCE

II NOT TO REPRODUCE OR COPY IT

III NOT TO REVEAL OR PUBLISH IN WHOLE OR PART

APPLE COMPUTER INC.

SIZE	DRAWING NUMBER	REV.
D	051-6949	09

SCALE NONE SHT 7 OF 111

www.teknisi-indonesia.com

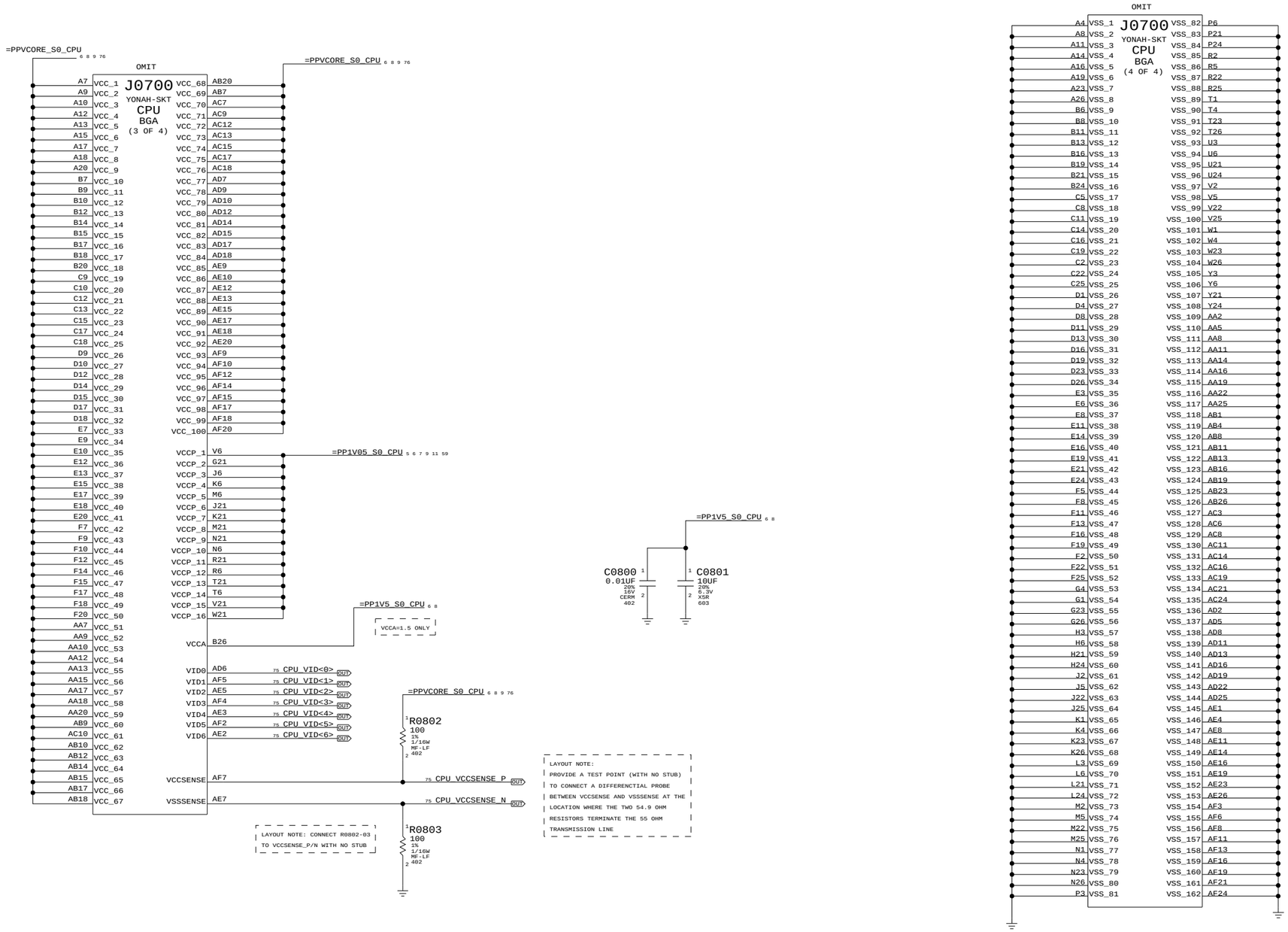

CPU 2 OF 2-PWR/GND

SYNC_MASTER=MASTER SYNC_DATE=05/03/2005

NOTICE OF PROPRIETARY PROPERTY

THE INFORMATION CONTAINED HEREIN IS THE PROPRIETARY PROPERTY OF APPLE COMPUTER, INC. THE POSSESSOR AGREES TO THE FOLLOWING

I TO MAINTAIN THE DOCUMENT IN CONFIDENCE
II NOT TO REPRODUCE OR COPY IT
III NOT TO REVEAL OR PUBLISH IN WHOLE OR PART

APPLE COMPUTER INC.

SIZE	DRAWING NUMBER	REV.
D	051-6949	09
SCALE NONE	SHT 8 OF 111	

www.teknisi-indonesia.com

CPU HEATSINK MOUNTING HOLES

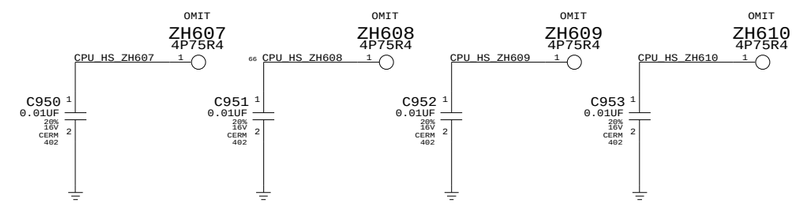

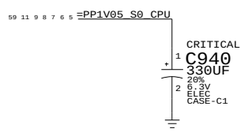

VCCP CORE DECOUPLING

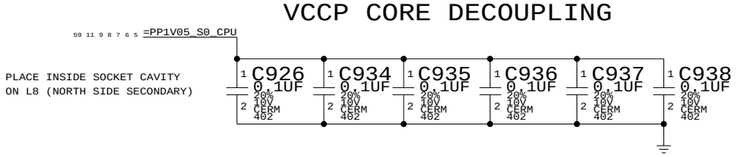

VCC CORE DECOUPLING

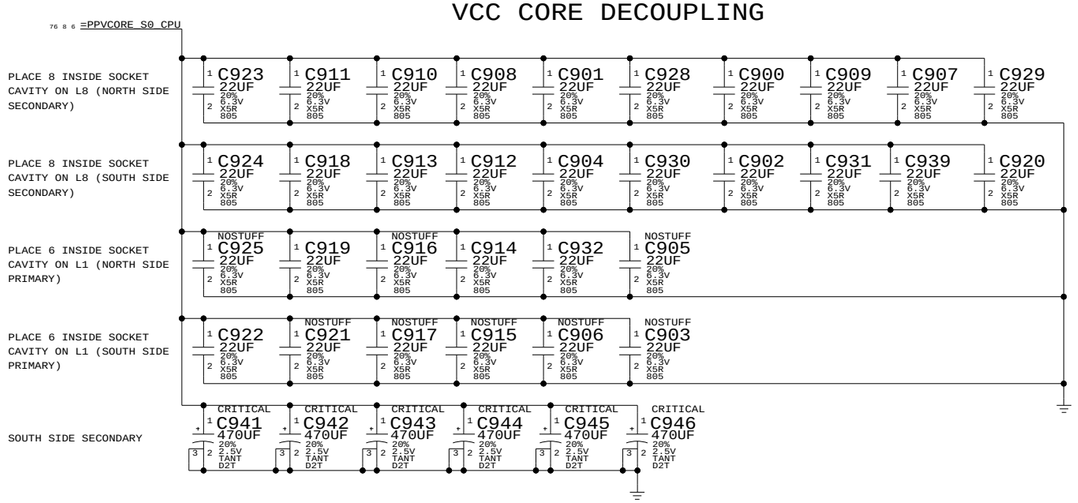

CPU DECAPS & VID<>

NOTICE OF PROPRIETARY PROPERTY

THE INFORMATION CONTAINED HEREIN IS THE PROPRIETARY PROPERTY OF APPLE COMPUTER, INC. THE POSSESSOR AGREES TO THE FOLLOWING

I TO MAINTAIN THE DOCUMENT IN CONFIDENCE

II NOT TO REPRODUCE OR COPY IT

III NOT TO REVEAL OR PUBLISH IN WHOLE OR PART

APPLE COMPUTER INC.

SIZE	DRAWING NUMBER	REV.
D	051-6949	09
SCALE NONE	SHT 9 OF 111	

www.teknisi-indonesia.com

CPU THERMAL SENSOR

NOTE:
IF CPU T DIODE TO BE READ IN OFF STATE,
THEN THIS SHOULD BE S5

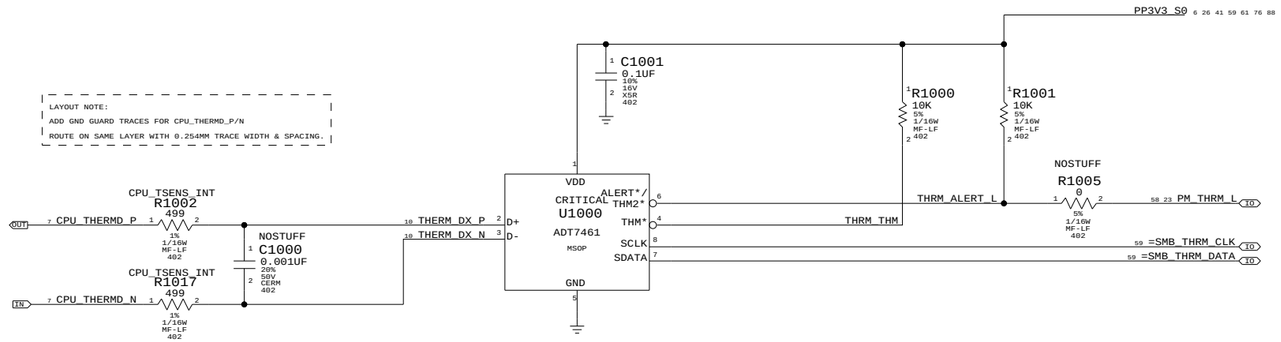

LAYOUT NOTE:
ADD GND GUARD TRACES FOR CPU_THERMD_P/N
ROUTE ON SAME LAYER WITH 0.254MM TRACE WIDTH & SPACING.

NOTE: SYMBOL SHOULD BE SHOWN ADT7461A

LAYOUT NOTE:
PLACE R1002 AND R1018 SUCH THAT THEY SHARE ONE PAD
PLACE R1017 AND R1019 SUCH THAT THEY SHARE ONE PAD

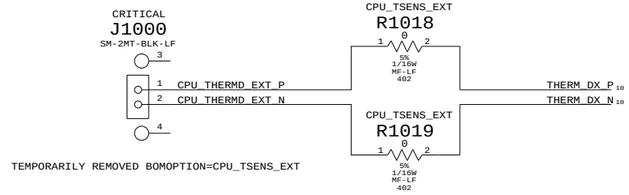

TEMPORARILY REMOVED BOMOPTION=CPU_TSENS_EXT

CPU TEMP SENSOR

NOTICE OF PROPRIETARY PROPERTY

THE INFORMATION CONTAINED HEREIN IS THE PROPRIETARY PROPERTY OF APPLE COMPUTER, INC. THE POSSESSOR AGREES TO THE FOLLOWING

I TO MAINTAIN THE DOCUMENT IN CONFIDENCE
II NOT TO REPRODUCE OR COPY IT
III NOT TO REVEAL OR PUBLISH IN WHOLE OR PART

APPLE COMPUTER INC.

SIZE	DRAWING NUMBER	REV.
D	051-6949	09
SCALE NONE	SHT 10 OF 111	

www.teknisi-indonesia.com

CPU ITP700FLEX DEBUG SUPPORT

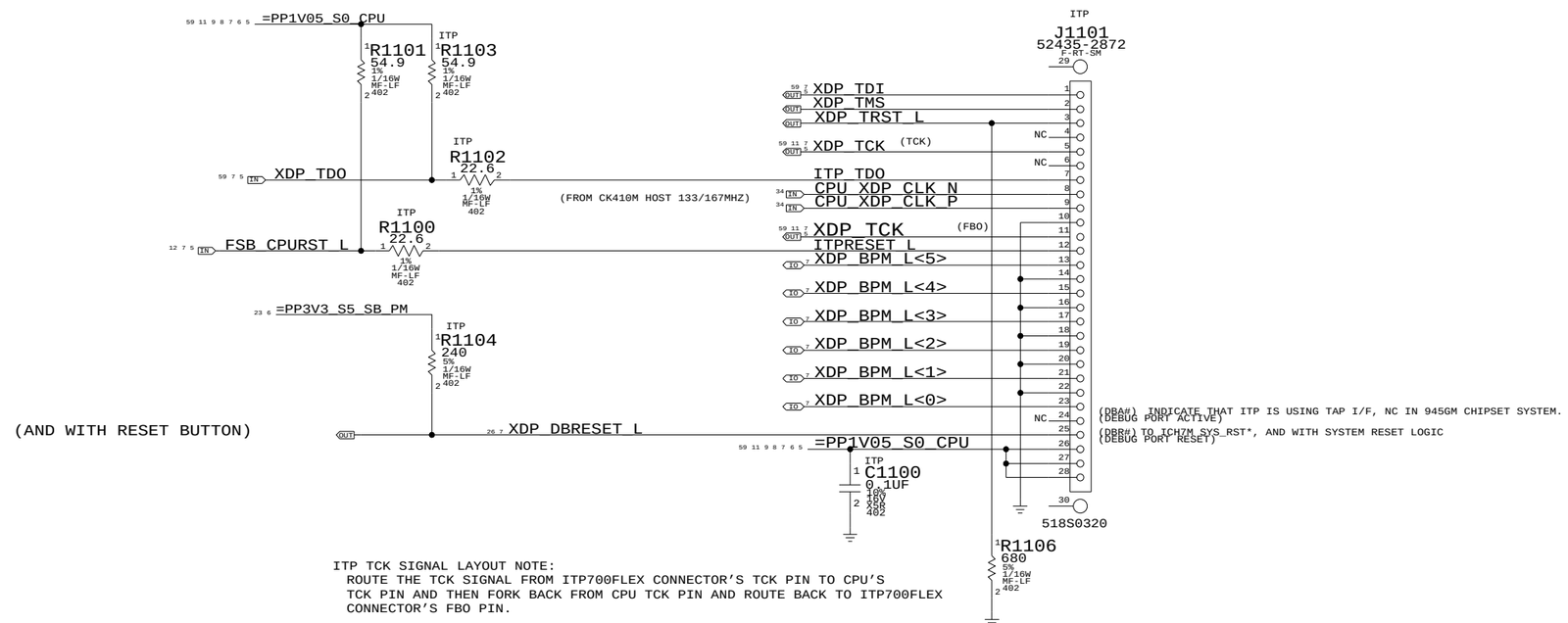

ITP TCK SIGNAL LAYOUT NOTE:
ROUTE THE TCK SIGNAL FROM ITP700FLEX CONNECTOR'S TCK PIN TO CPU'S TCK PIN AND THEN FORK BACK FROM CPU TCK PIN AND ROUTE BACK TO ITP700FLEX CONNECTOR'S FBO PIN.

CPU ITP700FLEX DEBUG

SYNC_MASTER=MASTER SYNC_DATE=5/23/05

NOTICE OF PROPRIETARY PROPERTY

THE INFORMATION CONTAINED HEREIN IS THE PROPRIETARY PROPERTY OF APPLE COMPUTER, INC. THE POSSESSOR AGREES TO THE FOLLOWING

I TO MAINTAIN THE DOCUMENT IN CONFIDENCE

II NOT TO REPRODUCE OR COPY IT

III NOT TO REVEAL OR PUBLISH IN WHOLE OR PART

APPLE COMPUTER INC.

SIZE	DRAWING NUMBER	REV.
D	051-6949	09
SCALE NONE	SHT 11 OF 111	

www.teknisi-indonesia.com

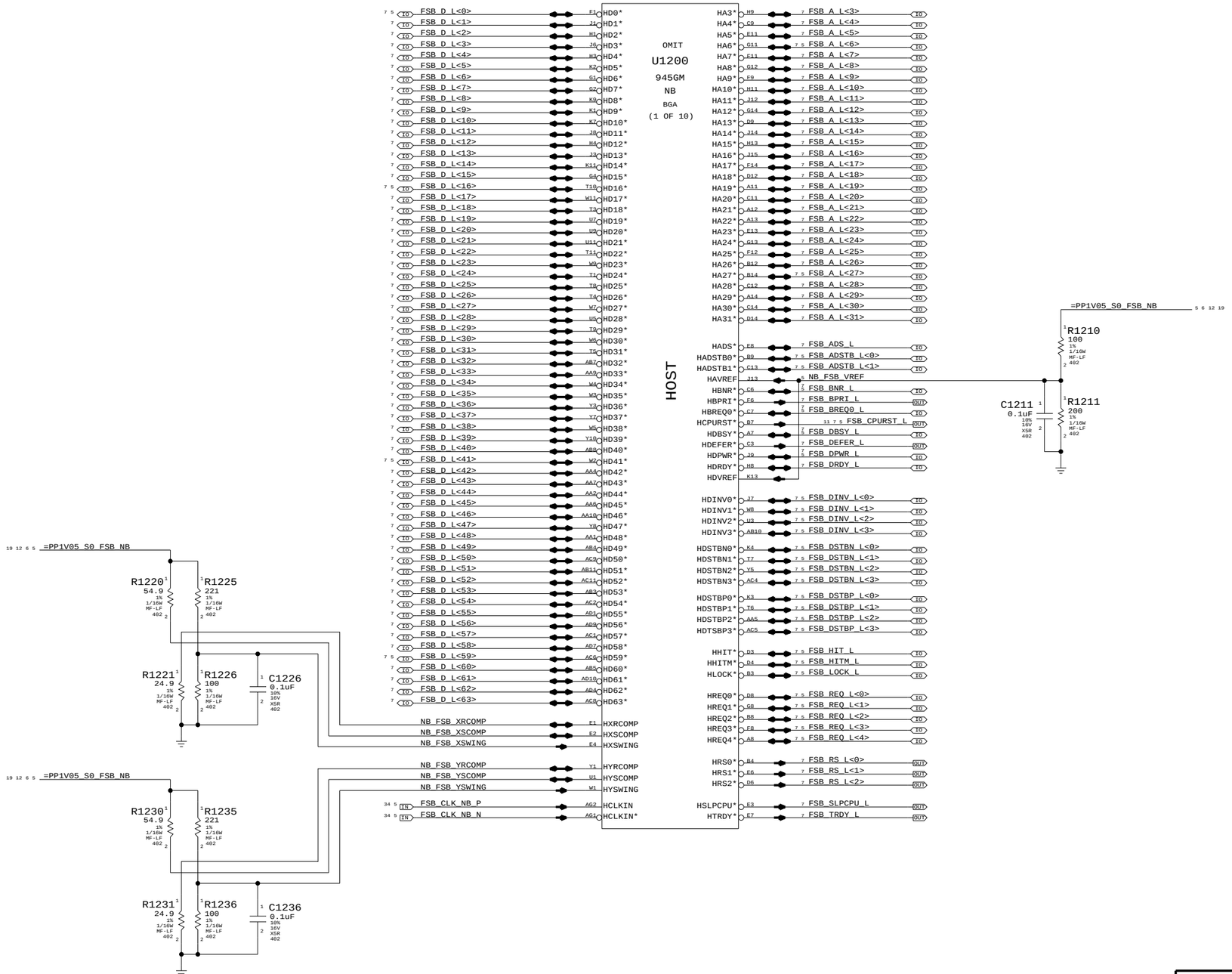

NB CPU Interface

SYNC_MASTER=(MASTER) SYNC_DATE=(MASTER)

NOTICE OF PROPRIETARY PROPERTY

THE INFORMATION CONTAINED HEREIN IS THE PROPRIETARY PROPERTY OF APPLE COMPUTER, INC. THE POSSESSOR AGREES TO THE FOLLOWING

I TO MAINTAIN THE DOCUMENT IN CONFIDENCE

II NOT TO REPRODUCE OR COPY IT

III NOT TO REVEAL OR PUBLISH IN WHOLE OR PART

APPLE COMPUTER INC.

SIZE	DRAWING NUMBER	REV.
D	051-6949	09

SCALE NONE SHT 12 OF 111

www.teknisi-indonesia.com

LVDS Disable

Can leave all signals NC if LVDS is not implemented
Tie VCC_TXLVDS and VCCA_LVDS to GND. If SDVO is used
VCCD_LVDS must remain powered with proper decoupling.
Otherwise, tie VCCD_LVDS to GND also.

TV-Out Signal Usage:

Composite: DACA only
S-Video: DACB & DACC only
Component: DACA, DACB & DACC

Unused DAC outputs must remain powered, but can omit
filtering components. Unused DAC outputs should
connect to GND through 75-ohm resistors.

TV-Out Disable

Tie DACx_OUT, IRTNx, and IREF to 1.5V power rail.
Tie VCCD_TVDAC, VCCD_QTVDAC, VCCA_TVDACx, and
VCCA_TVBG to 1.5V power rail. Tie VSSA_TVBG to GND.

CRT Disable

Tie R/R#/G/G#/B/B# and IREF to VCC Core rail, tie
HSYNC and VSYNC to GND. Tie VCCA_CRTDAC to VCC Core
rail, and tie VSSA_CRTDAC and VCC_SYNC to GND.

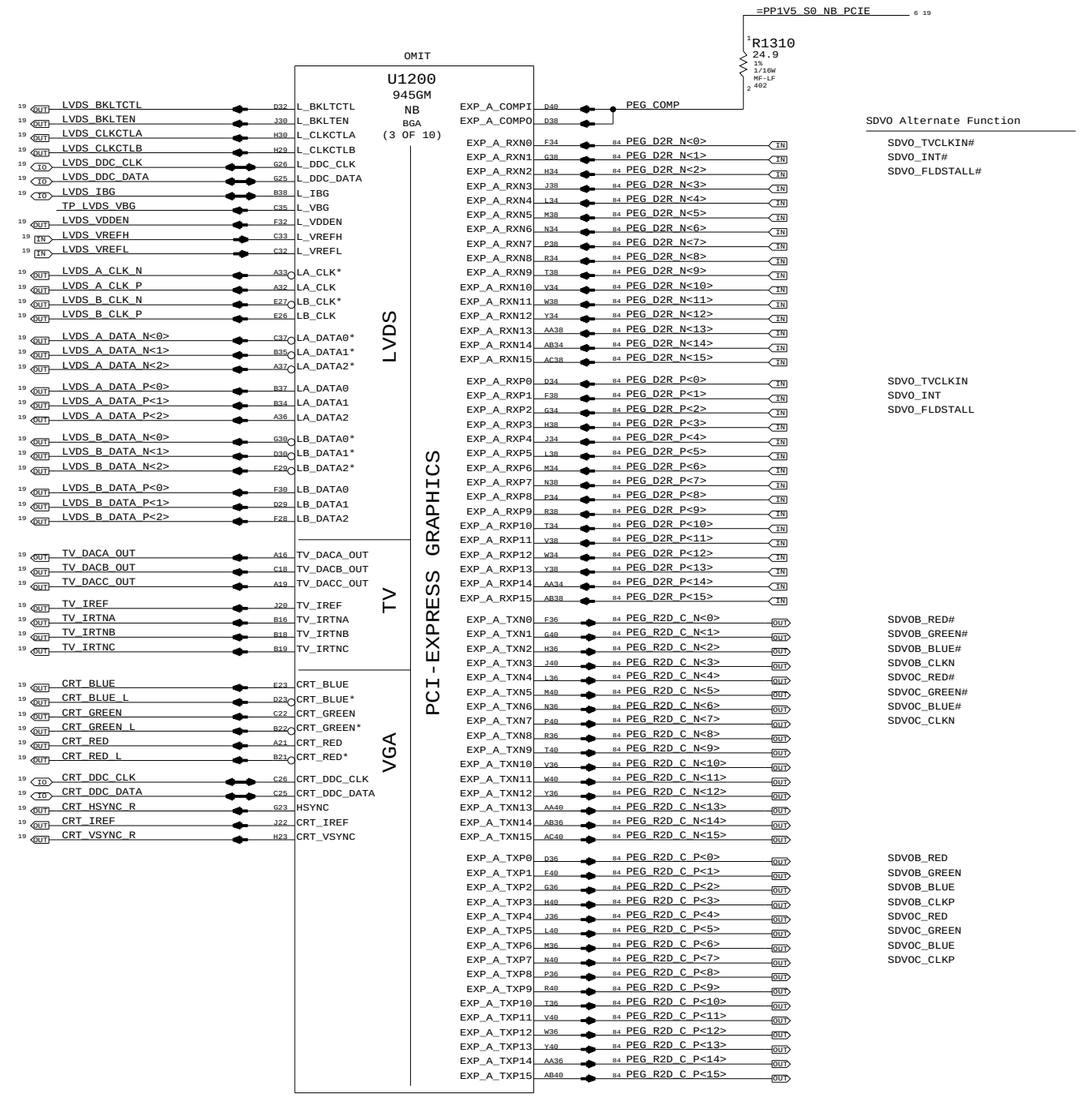

NB PEG / Video Interfaces

SYNC_MASTER=(MASTER) SYNC_DATE=(MASTER)

NOTICE OF PROPRIETARY PROPERTY

THE INFORMATION CONTAINED HEREIN IS THE PROPRIETARY PROPERTY OF APPLE COMPUTER, INC. THE POSSESSOR AGREES TO THE FOLLOWING

I TO MAINTAIN THE DOCUMENT IN CONFIDENCE
II NOT TO REPRODUCE OR COPY IT
III NOT TO REVEAL OR PUBLISH IN WHOLE OR PART

APPLE COMPUTER INC.

SIZE	DRAWING NUMBER	REV.
D	051-6949	09
SCALE NONE	SHT 13 OF 111	

www.teknisi-indonesia.com

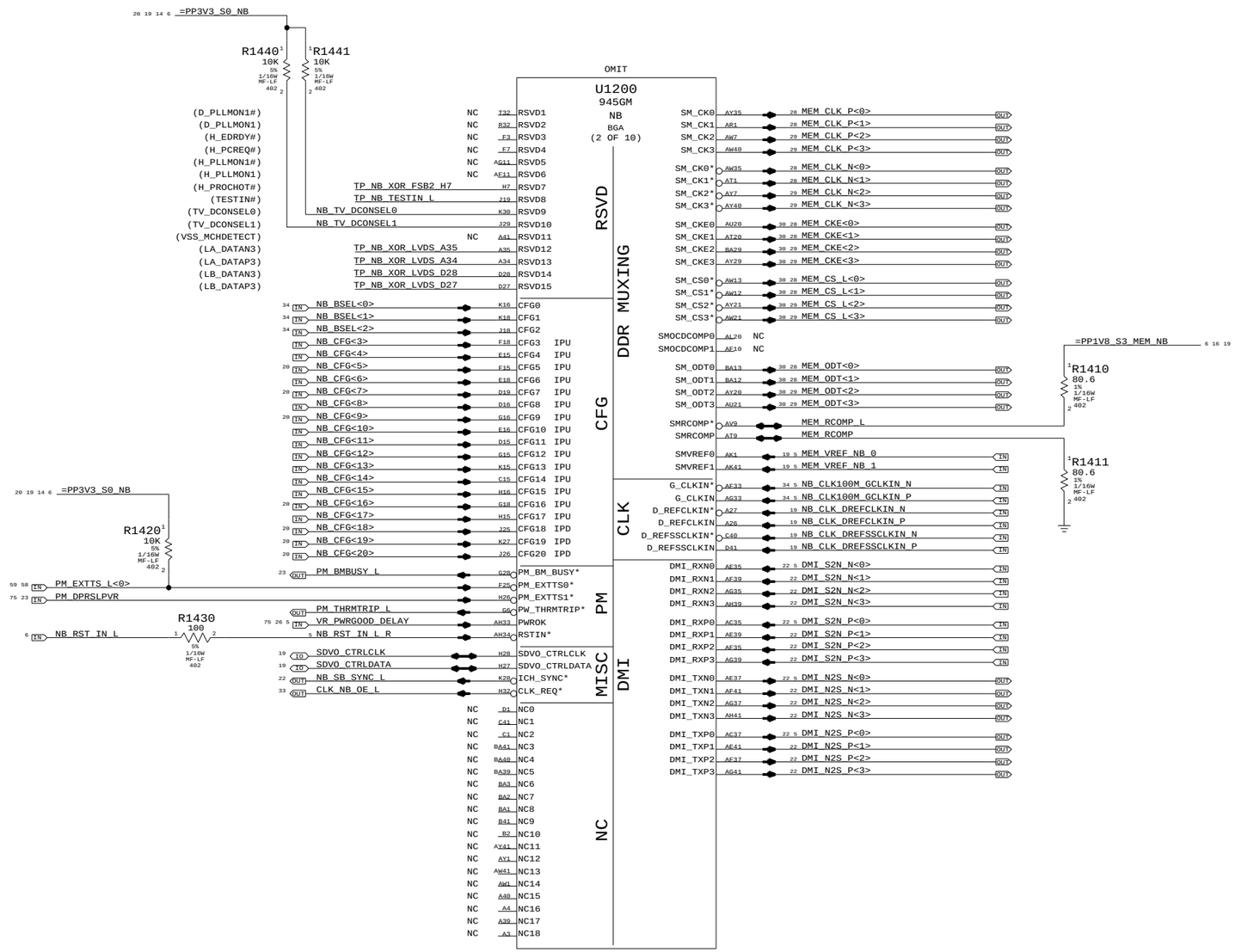

NB Misc Interfaces

SYNC_MASTER=(MASTER) SYNC_DATE=(MASTER)

NOTICE OF PROPRIETARY PROPERTY

THE INFORMATION CONTAINED HEREIN IS THE PROPRIETARY PROPERTY OF APPLE COMPUTER, INC. THE POSSESSOR AGREES TO THE FOLLOWING

I TO MAINTAIN THE DOCUMENT IN CONFIDENCE

II NOT TO REPRODUCE OR COPY IT

III NOT TO REVEAL OR PUBLISH IN WHOLE OR PART

APPLE COMPUTER INC.

SIZE	DRAWING NUMBER	REV.
D	051-6949	09
SCALE NONE	SHT 14 OF 111	

www.teknisi-indonesia.com

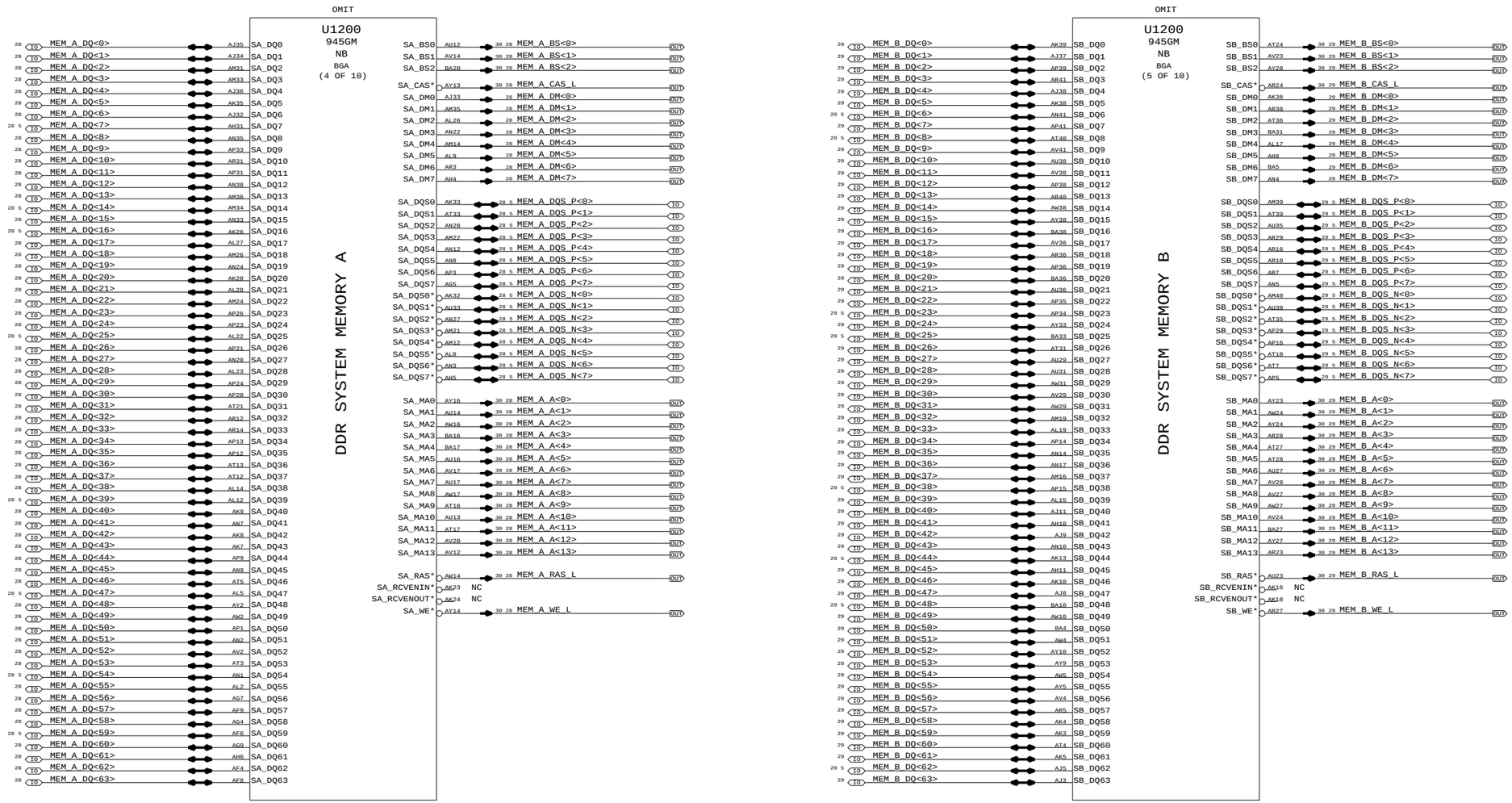

NB DDR2 Interfaces

SYNC_MASTER=(MASTER) SYNC_DATE=(MASTER)

NOTICE OF PROPRIETARY PROPERTY

THE INFORMATION CONTAINED HEREIN IS THE PROPRIETARY PROPERTY OF APPLE COMPUTER, INC. THE POSSESSOR AGREES TO THE FOLLOWING

I TO MAINTAIN THE DOCUMENT IN CONFIDENCE

II NOT TO REPRODUCE OR COPY IT

III NOT TO REVEAL OR PUBLISH IN WHOLE OR PART

APPLE COMPUTER INC.

SIZE	DRAWING NUMBER	REV.
D	051-6949	09

SCALE NONE SHT 15 OF 111

www.teknisi-indonesia.com

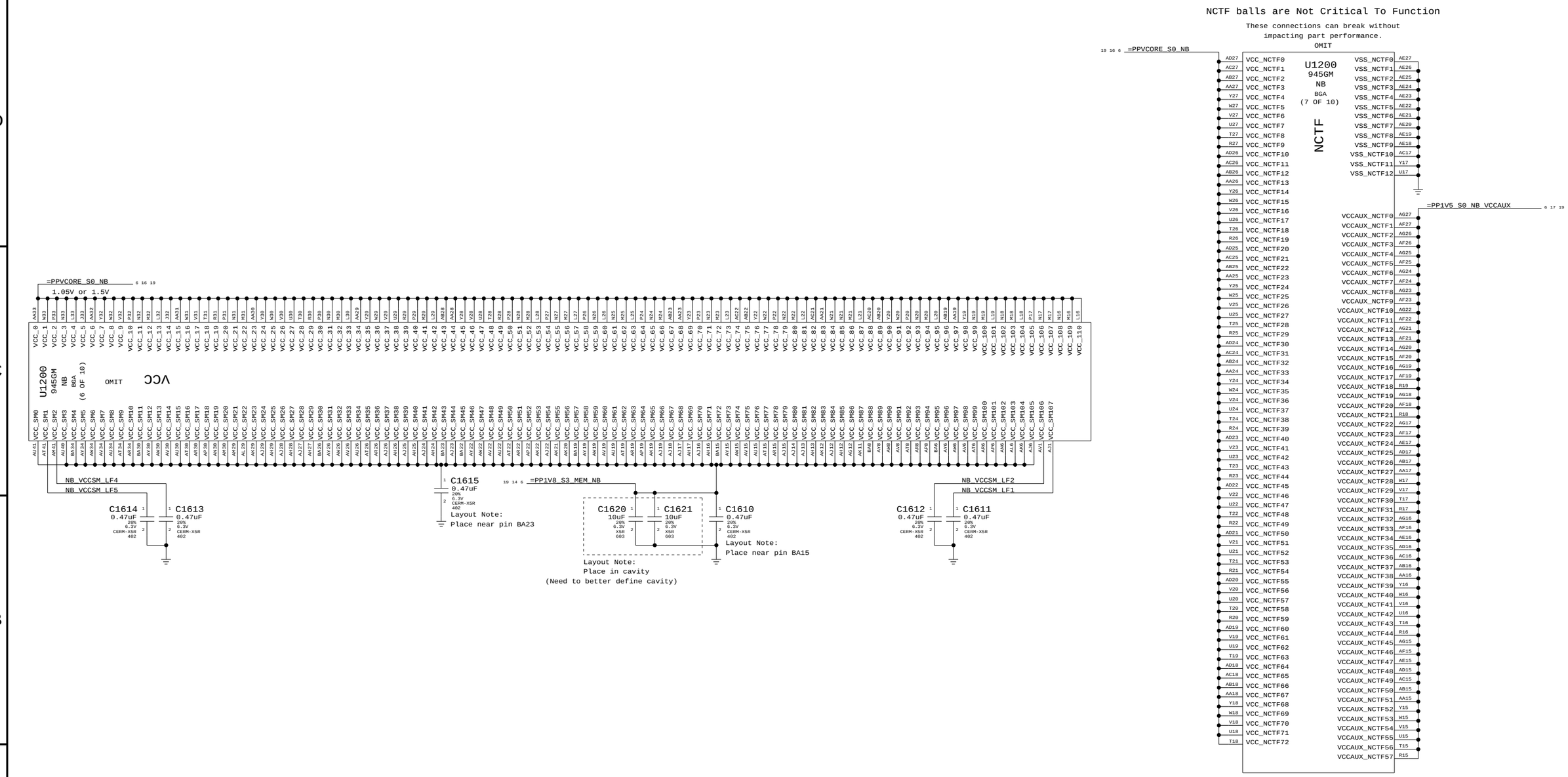

NB Power 1

SYNC_MASTER=(MASTER) SYNC_DATE=(MASTER)

NOTICE OF PROPRIETARY PROPERTY

THE INFORMATION CONTAINED HEREIN IS THE PROPRIETARY PROPERTY OF APPLE COMPUTER, INC. THE POSSESSOR AGREES TO THE FOLLOWING

I TO MAINTAIN THE DOCUMENT IN CONFIDENCE
II NOT TO REPRODUCE OR COPY IT
III NOT TO REVEAL OR PUBLISH IN WHOLE OR PART

APPLE COMPUTER INC.

SIZE	DRAWING NUMBER	REV.
D	051-6949	09

SCALE NONE SHT 16 OF 111

www.teknisi-indonesia.com

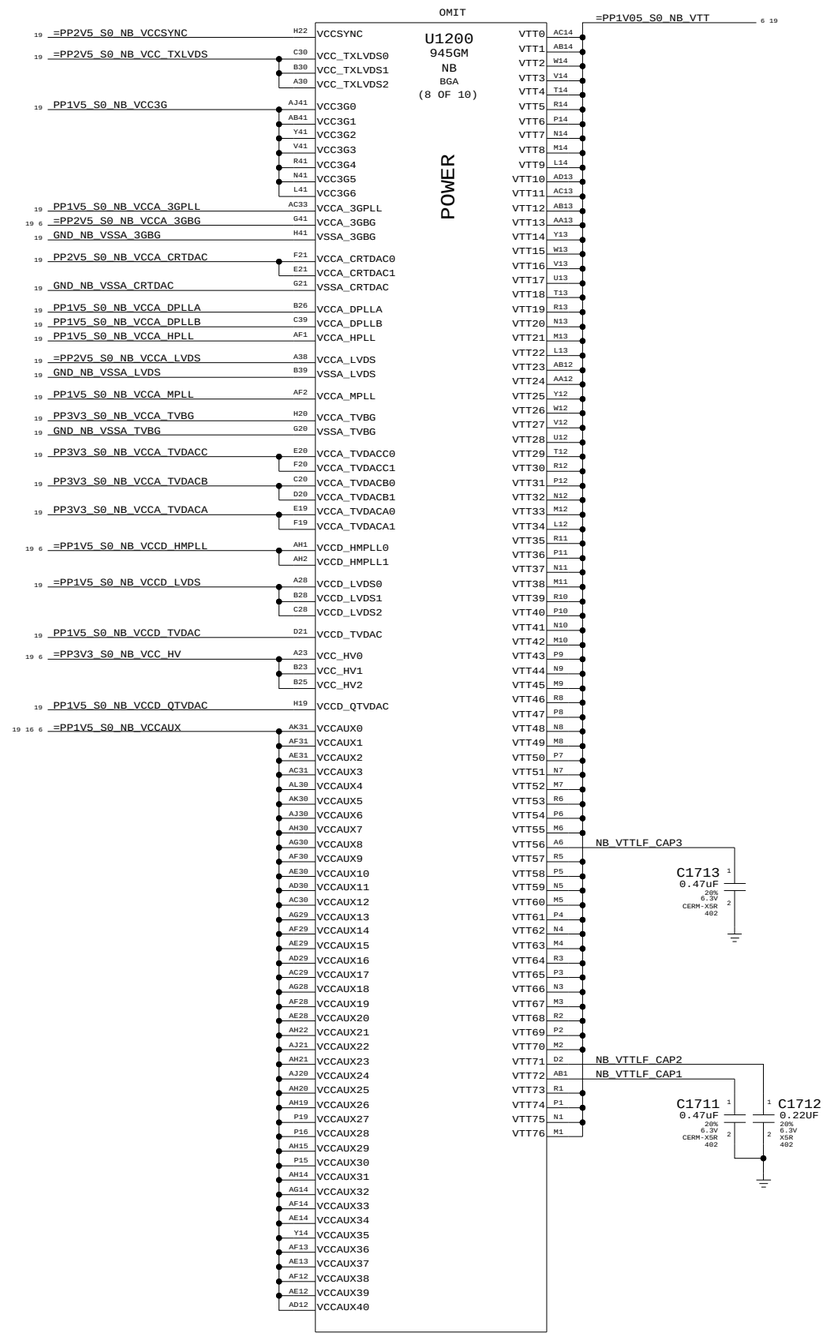

NB Power 2

SYNC_MASTER=(MASTER) SYNC_DATE=(MASTER)

NOTICE OF PROPRIETARY PROPERTY

THE INFORMATION CONTAINED HEREIN IS THE PROPRIETARY PROPERTY OF APPLE COMPUTER, INC. THE POSSESSOR AGREES TO THE FOLLOWING

I TO MAINTAIN THE DOCUMENT IN CONFIDENCE

II NOT TO REPRODUCE OR COPY IT

III NOT TO REVEAL OR PUBLISH IN WHOLE OR PART

APPLE COMPUTER INC.

SIZE	DRAWING NUMBER	REV.
D	051-6949	09

SCALE NONE SHT 17 OF 111

www.teknisi-indonesia.com

OMIT

U1200
945GM
NB
BGA
(9 OF 10)

VSS

AC41	VSS_0	VSS_97	AK34
AA41	VSS_1	VSS_98	AG34
W41	VSS_2	VSS_99	AF34
T41	VSS_3	VSS_100	AE34
P41	VSS_4	VSS_101	AC34
M41	VSS_5	VSS_102	C34
J41	VSS_6	VSS_103	AW33
F41	VSS_7	VSS_104	AV33
AV40	VSS_8	VSS_105	AR33
AP40	VSS_9	VSS_106	AE33
AN40	VSS_10	VSS_107	AB33
AK40	VSS_11	VSS_108	Y33
AJ40	VSS_12	VSS_109	V33
AH40	VSS_13	VSS_110	T33
AG40	VSS_14	VSS_111	R33
AF40	VSS_15	VSS_112	M33
AE40	VSS_16	VSS_113	H33
B40	VSS_17	VSS_114	G33
AY39	VSS_18	VSS_115	F33
AW39	VSS_19	VSS_116	D33
AV39	VSS_20	VSS_117	B33
AR39	VSS_21	VSS_118	AH32
AN39	VSS_22	VSS_119	AG32
AJ39	VSS_23	VSS_120	AF32
AC39	VSS_24	VSS_121	AE32
AB39	VSS_25	VSS_122	AC32
AA39	VSS_26	VSS_123	AB32
Y39	VSS_27	VSS_124	G32
W39	VSS_28	VSS_125	B32
V39	VSS_29	VSS_126	AY31
T39	VSS_30	VSS_127	AV31
R39	VSS_31	VSS_128	AN31
P39	VSS_32	VSS_129	AJ31
N39	VSS_33	VSS_130	AG31
M39	VSS_34	VSS_131	AB31
L39	VSS_35	VSS_132	Y31
J39	VSS_36	VSS_133	AB30
H39	VSS_37	VSS_134	E30
G39	VSS_38	VSS_135	AT29
F39	VSS_39	VSS_136	AN29
D39	VSS_40	VSS_137	AB29
AT38	VSS_41	VSS_138	T29
AM38	VSS_42	VSS_139	N29
AH38	VSS_43	VSS_140	K29
AG38	VSS_44	VSS_141	G29
AF38	VSS_45	VSS_142	E29
AE38	VSS_46	VSS_143	C29
C38	VSS_47	VSS_144	B29
AK37	VSS_48	VSS_145	A29
AH37	VSS_49	VSS_146	BA28
AB37	VSS_50	VSS_147	AW28
AA37	VSS_51	VSS_148	AU28
Y37	VSS_52	VSS_149	AP28
W37	VSS_53	VSS_150	AM28
V37	VSS_54	VSS_151	AD28
T37	VSS_55	VSS_152	AC28
R37	VSS_56	VSS_153	W28
P37	VSS_57	VSS_154	J28
N37	VSS_58	VSS_155	E28
M37	VSS_59	VSS_156	AP27
L37	VSS_60	VSS_157	AK27
J37	VSS_61	VSS_158	AK27
H37	VSS_62	VSS_159	J27
G37	VSS_63	VSS_160	G27
F37	VSS_64	VSS_161	F27
D37	VSS_65	VSS_162	C27
AY36	VSS_66	VSS_163	B27
AW36	VSS_67	VSS_164	AN26
AN36	VSS_68	VSS_165	M26
AH36	VSS_69	VSS_166	K26
AG36	VSS_70	VSS_167	F26
AF36	VSS_71	VSS_168	D26
AE36	VSS_72	VSS_169	AK25
AC36	VSS_73	VSS_170	P25
C36	VSS_74	VSS_171	K25
B36	VSS_75	VSS_172	H25
BA35	VSS_76	VSS_173	E25
AV35	VSS_77	VSS_174	D25
AR35	VSS_78	VSS_175	A25
AH35	VSS_79	VSS_176	BA24
AB35	VSS_80	VSS_177	AU24
AA35	VSS_81	VSS_178	AL24
Y35	VSS_82	VSS_179	AW23
W35	VSS_83		
V35	VSS_84		
T35	VSS_85		
R35	VSS_86		
P35	VSS_87		
N35	VSS_88		
M35	VSS_89		
L35	VSS_90		
J35	VSS_91		
H35	VSS_92		
G35	VSS_93		
F35	VSS_94		
D35	VSS_95		
AN34	VSS_96		

OMIT

U1200
945GM
NB
BGA
(10 OF 10)

VSS

AT23	VSS_180	VSS_273	J11
AN23	VSS_181	VSS_274	D11
AM23	VSS_182	VSS_275	B11
AH23	VSS_183	VSS_276	AV10
AC23	VSS_184	VSS_277	AP10
W23	VSS_185	VSS_278	AL10
K23	VSS_186	VSS_279	AJ10
J23	VSS_187	VSS_280	AG10
F23	VSS_188	VSS_281	AC10
C23	VSS_189	VSS_282	W10
AA22	VSS_190	VSS_283	U10
K22	VSS_191	VSS_284	BA9
G22	VSS_192	VSS_285	AW9
F22	VSS_193	VSS_286	AR9
E22	VSS_194	VSS_287	AH9
D22	VSS_195	VSS_288	AB9
A22	VSS_196	VSS_289	Y9
BA21	VSS_197	VSS_290	R9
AV21	VSS_198	VSS_291	G9
AR21	VSS_199	VSS_292	E9
AN21	VSS_200	VSS_293	A9
AL21	VSS_201	VSS_294	AG8
AB21	VSS_202	VSS_295	AD8
Y21	VSS_203	VSS_296	AA8
P21	VSS_204	VSS_297	U8
K21	VSS_205	VSS_298	K8
J21	VSS_206	VSS_299	C8
H21	VSS_207	VSS_300	BA7
C21	VSS_208	VSS_301	AV7
AW20	VSS_209	VSS_302	AP7
AR20	VSS_210	VSS_303	AL7
AM20	VSS_211	VSS_304	AJ7
AA20	VSS_212	VSS_305	AH7
K20	VSS_213	VSS_306	AF7
B20	VSS_214	VSS_307	AC7
A20	VSS_215	VSS_308	R7
AN19	VSS_216	VSS_309	G7
AC19	VSS_217	VSS_310	D7
W19	VSS_218	VSS_311	AG6
K19	VSS_219	VSS_312	AD6
G19	VSS_220	VSS_313	AB6
C19	VSS_221	VSS_314	Y6
AH18	VSS_222	VSS_315	U6
P18	VSS_223	VSS_316	N6
H18	VSS_224	VSS_317	K6
D18	VSS_225	VSS_318	H6
A18	VSS_226	VSS_319	B6
AY17	VSS_227	VSS_320	AV5
AR17	VSS_228	VSS_321	AF5
AP17	VSS_229	VSS_322	AD5
AM17	VSS_230	VSS_323	AY4
AK17	VSS_231	VSS_324	AR4
AV16	VSS_232	VSS_325	AP4
AN16	VSS_233	VSS_326	AL4
AL16	VSS_234	VSS_327	AJ4
J16	VSS_235	VSS_328	Y4
F16	VSS_236	VSS_329	U4
C16	VSS_237	VSS_330	R4
AN15	VSS_238	VSS_331	J4
AM15	VSS_239	VSS_332	F4
AK15	VSS_240	VSS_333	C4
N15	VSS_241	VSS_334	AY3
M15	VSS_242	VSS_335	AW3
L15	VSS_243	VSS_336	AV3
B15	VSS_244	VSS_337	AL3
A15	VSS_245	VSS_338	AH3
BA14	VSS_246	VSS_339	AG3
AT14	VSS_247	VSS_340	AF3
AK14	VSS_248	VSS_341	AD3
AD14	VSS_249	VSS_342	AC3
AA14	VSS_250	VSS_343	AA3
U14	VSS_251	VSS_344	G3
K14	VSS_252	VSS_345	AT2
H14	VSS_253	VSS_346	AR2
E14	VSS_254	VSS_347	AP2
AV13	VSS_255	VSS_348	AK2
AR13	VSS_256	VSS_349	AJ2
AN13	VSS_257	VSS_350	AD2
AM13	VSS_258	VSS_351	AB2
AL13	VSS_259	VSS_352	Y2
AG13	VSS_260	VSS_353	U2
P13	VSS_261	VSS_354	T2
F13	VSS_262	VSS_355	N2
D13	VSS_263	VSS_356	J2
B13	VSS_264	VSS_357	H2
AY12	VSS_265	VSS_358	F2
AC12	VSS_266	VSS_359	C2
K12	VSS_267	VSS_360	AL1
H12	VSS_268		
E12	VSS_269		
AD11	VSS_270		
AA11	VSS_271		
Y11	VSS_272		

NB Grounds

SYNC_MASTER=(MASTER) SYNC_DATE=(MASTER)

NOTICE OF PROPRIETARY PROPERTY

THE INFORMATION CONTAINED HEREIN IS THE PROPRIETARY PROPERTY OF APPLE COMPUTER, INC. THE POSSESSOR AGREES TO THE FOLLOWING

I TO MAINTAIN THE DOCUMENT IN CONFIDENCE

II NOT TO REPRODUCE OR COPY IT

III NOT TO REVEAL OR PUBLISH IN WHOLE OR PART

APPLE COMPUTER INC.

SIZE	DRAWING NUMBER	REV.
D	051-6949	09
SCALE NONE	SHT 18 OF 111	

www.teknisi-indonesia.com

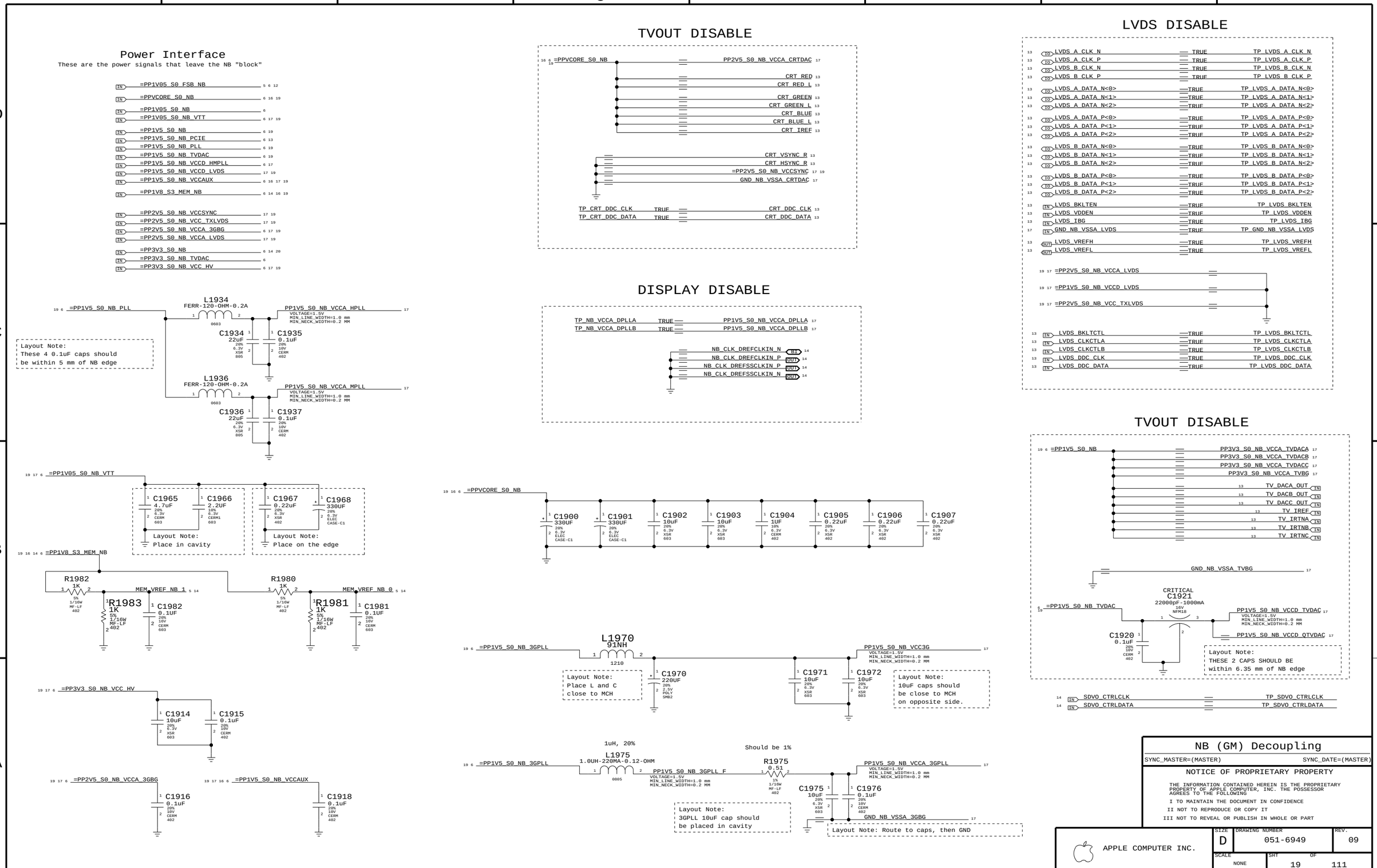

www.teknisi-indonesia.com

NB_CFG<3>	RESERVED

NB_CFG<4>	RESERVED

14 NB_CFG<5>
Internal pull-up

NB_CFG<5> DMI x2 Select	High = DMIx4 Low = DMIx2

NBCFG_DMI_X2
R2075
2.2K
5%
1/16W
MF-LF
402

PROBABLY NOT NEEDED

NB_CFG<6>	RESERVED

14 NB_CFG<7>
Internal pull-up

NB_CFG<7> CPU Strap	High = Mobile CPU Low = RESERVED

NO STUFF
R2077
2.2K
5%
1/16W
MF-LF
402

NB_CFG<8>	RESERVED

14 NB_CFG<9>
Internal pull-up

NB_CFG<9> PCIE Graphics Lane Reversal	High = Normal Low = Reversed

NBCFG_PEG_REVERSE
R2079
2.2K
5%
1/16W
MF-LF
402

NB_CFG<10>	RESERVED

NB_CFG<11>	RESERVED

Internal pull-ups

NB_CFG<13:12>	00 = Partial Clock Gating Disable 01 = XOR Mode Enabled 10 = All-Z Mode Enabled 11 = Normal Operation

NB_CFG<14>	RESERVED

NB_CFG<15>	RESERVED

14 NB_CFG<16>
Internal pull-up

NB_CFG<16> FSB Dynamic ODT	High = Enabled Low = Disabled

NBCFG_DYN_ODT_DISABLE
R2085
2.2K
5%
1/16W
MF-LF
402

NB_CFG<17>	RESERVED

=PP3V3_S0_NB 6 14 19 20
NBCFG_VCC_1V5
R2058
2.2K
5%
1/16W
MF-LF
402

NB_CFG<18> VCC Select	High = 1.5V Low = 1.05V

14 NB_CFG<18>
Internal pull-down

=PP3V3_S0_NB 6 14 19 20
NBCFG_DMI_REVERSE
R2059
2.2K
5%
1/16W
MF-LF
402

NB_CFG<19> DMI Lane Reversal	High = Reversed Low = Normal

14 NB_CFG<19>
Internal pull-down

=PP3V3_S0_NB 6 14 19 20
NBCFG_SDVO_AND_PCIE
R2060
2.2K
5%
1/16W
MF-LF
402

945 External Design Spec says reserved

NB_CFG<20> PCIe Backward Interop. Mode	High = Both active Low = Only SDVO or PCIe x1

14 NB_CFG<20>
Internal pull-down

PROBABLY NOT NEEDED

NB Config Straps

SYNC_MASTER=(MASTER) SYNC_DATE=(MASTER)

NOTICE OF PROPRIETARY PROPERTY

THE INFORMATION CONTAINED HEREIN IS THE PROPRIETARY PROPERTY OF APPLE COMPUTER, INC. THE POSSESSOR AGREES TO THE FOLLOWING

I TO MAINTAIN THE DOCUMENT IN CONFIDENCE
II NOT TO REPRODUCE OR COPY IT
III NOT TO REVEAL OR PUBLISH IN WHOLE OR PART

APPLE COMPUTER INC.

SIZE	DRAWING NUMBER	REV.
D	051-6949	09

SCALE NONE SHT 20 OF 111

www.teknisi-indonesia.com

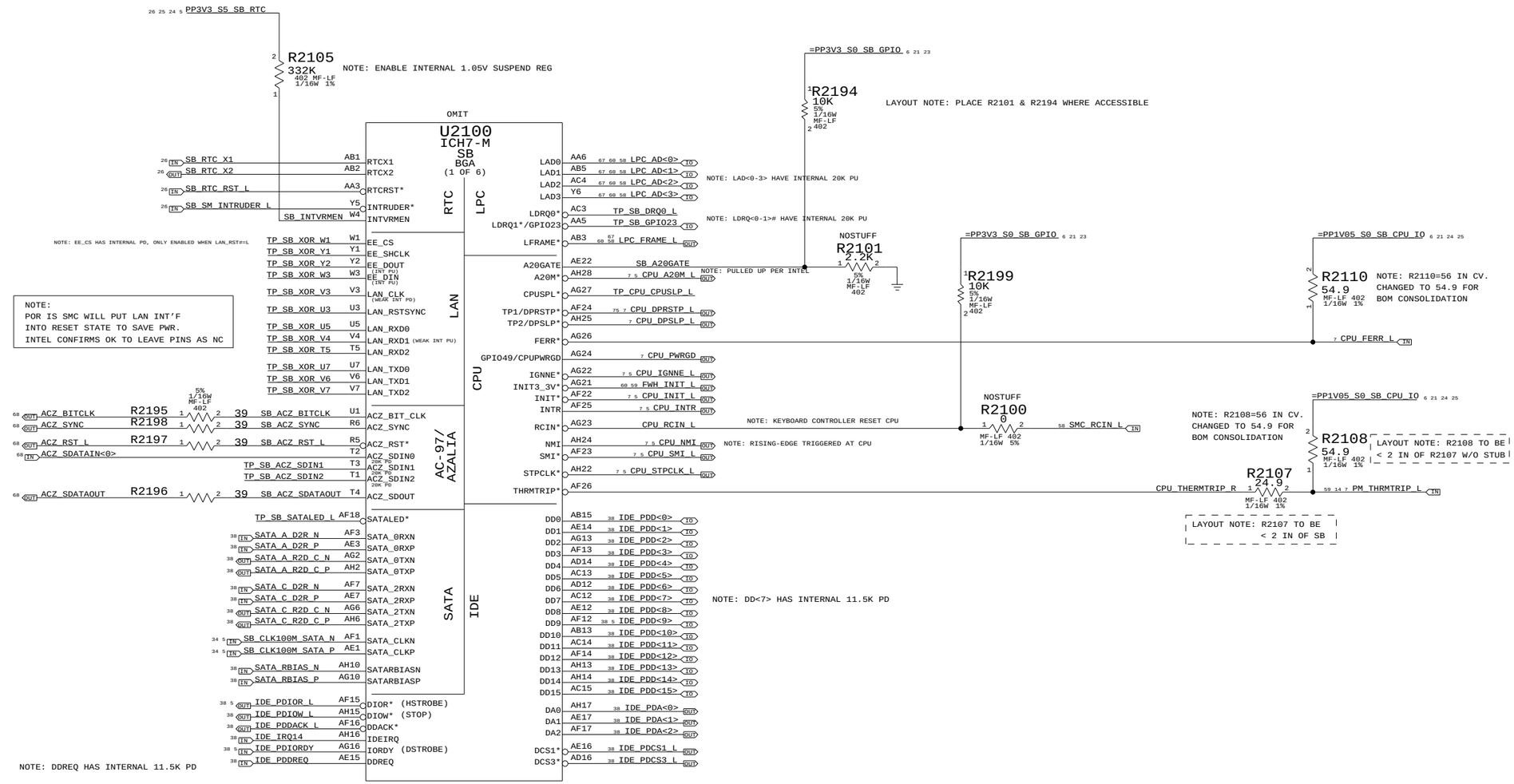

	AC '07	INTEL HIGH DEFINITION AUDIO
ACZ_BIT_CLK	INTERNAL 20K PD ENABLED WHEN - LSO BIT IN AC'97 GLOBAL CONTROL REG = 1; OR - BOTH FUNCTION 2 & 3 OF DEVICE 30 ARE DISABLED	INTERNAL 20K PD ONLY ENABLED IN S3COLD
ACZ_RST#		NONE
ACZ_SDIN[0-2]	INTERNAL 20K PD	INTERNAL 20K PD
ACZ_SDOUT	INTERNAL 20K PD ENABLED DURING RESET AND WHEN - LSO BIT IN AC'97 GLOBAL CONTROL REG = 1; OR - BOTH FUNCTION 2 & 3 OF DEVICE 30 ARE DISABLED	INTERNAL 20K PD ENABLED WHEN - LSO BIT IN AC'97 GLOBAL CONTROL REG = 1; OR - BOTH FUNCTION 2 & 3 OF DEVICE 30 ARE DISABLED
ACZ_SYNC		INTERNAL 20K PD

SB: 1 OF 4

SYNC_MASTER=N/A SYNC_DATE=N/A

NOTICE OF PROPRIETARY PROPERTY

THE INFORMATION CONTAINED HEREIN IS THE PROPRIETARY PROPERTY OF APPLE COMPUTER, INC. THE POSSESSOR AGREES TO THE FOLLOWING

I TO MAINTAIN THE DOCUMENT IN CONFIDENCE

II NOT TO REPRODUCE OR COPY IT

III NOT TO REVEAL OR PUBLISH IN WHOLE OR PART

APPLE COMPUTER INC.

SIZE	DRAWING NUMBER	REV.
D	051-6949	09
SCALE NONE	SHT 21 OF 111	

www.teknisi-indonesia.com

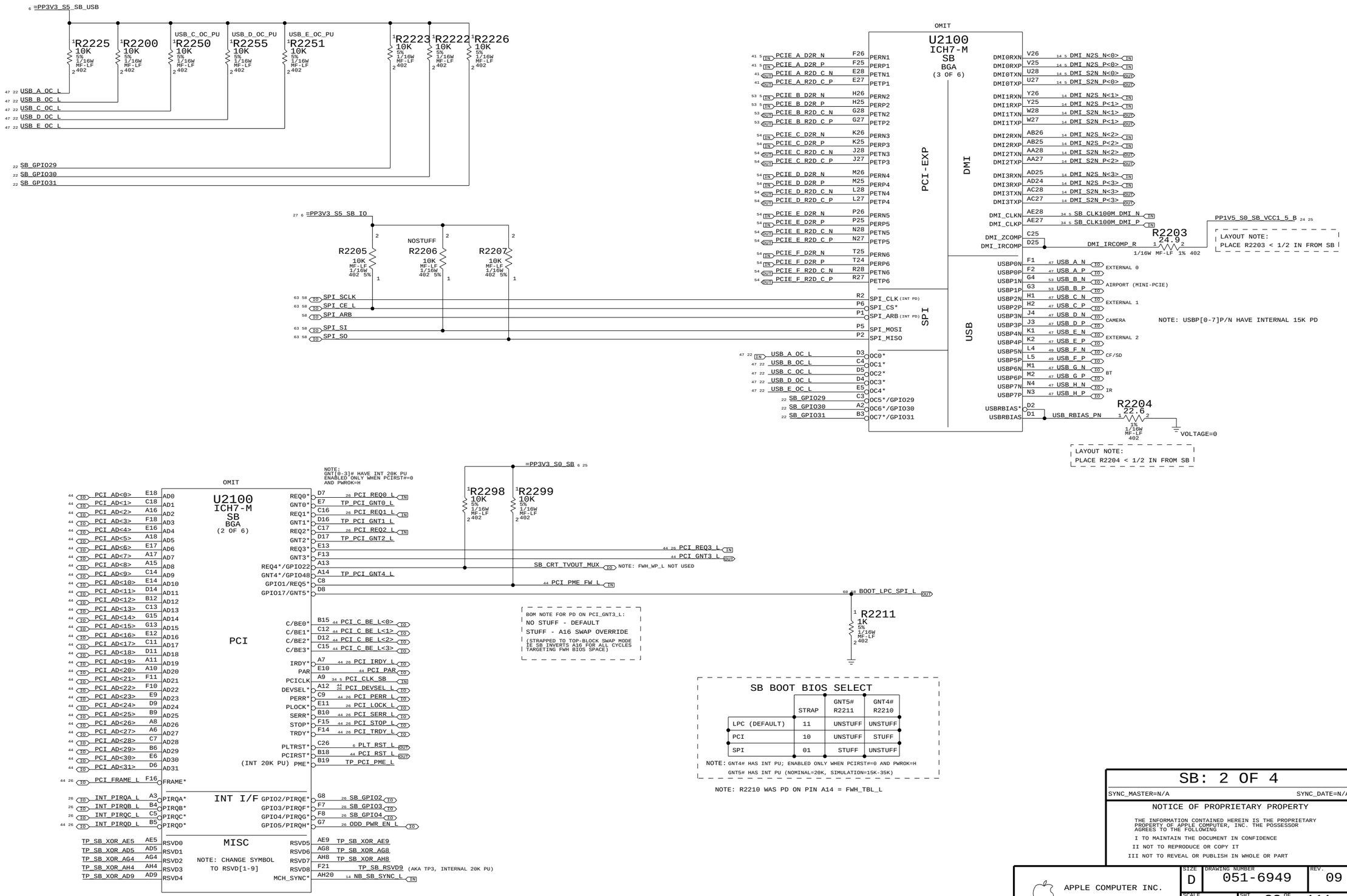

SB: 2 OF 4

SYNC_MASTER=N/A SYNC_DATE=N/A

NOTICE OF PROPRIETARY PROPERTY

THE INFORMATION CONTAINED HEREIN IS THE PROPRIETARY PROPERTY OF APPLE COMPUTER, INC. THE POSSESSOR AGREES TO THE FOLLOWING

I TO MAINTAIN THE DOCUMENT IN CONFIDENCE

II NOT TO REPRODUCE OR COPY IT

III NOT TO REVEAL OR PUBLISH IN WHOLE OR PART

APPLE COMPUTER INC.

SIZE	DRAWING NUMBER	REV.
D	051-6949	09

SCALE NONE SHT 22 OF 111

www.teknisi-indonesia.com

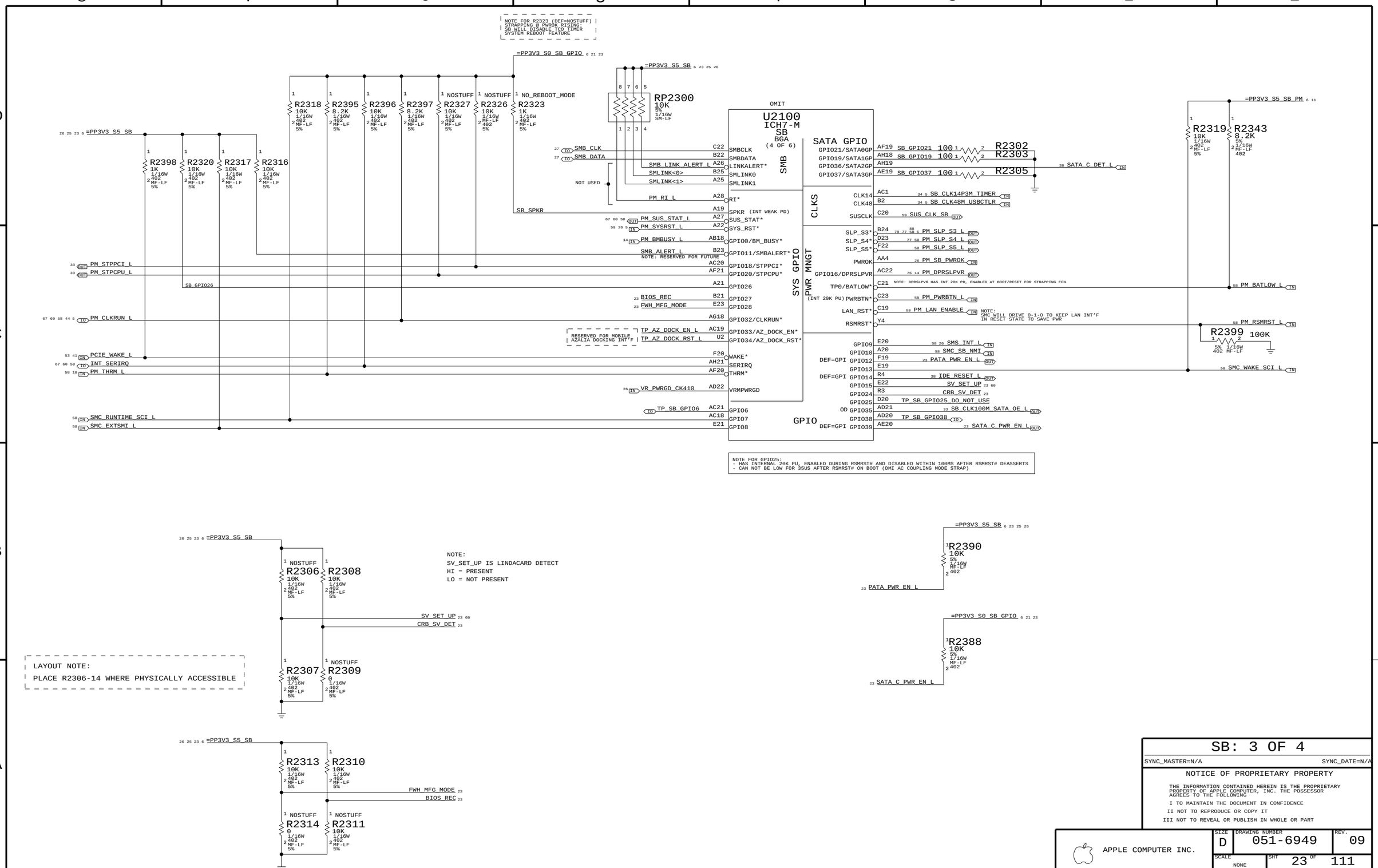

SB: 3 OF 4

SYNC_MASTER=N/A SYNC_DATE=N/A

NOTICE OF PROPRIETARY PROPERTY

THE INFORMATION CONTAINED HEREIN IS THE PROPRIETARY PROPERTY OF APPLE COMPUTER, INC. THE POSSESSOR AGREES TO THE FOLLOWING

I TO MAINTAIN THE DOCUMENT IN CONFIDENCE
II NOT TO REPRODUCE OR COPY IT
III NOT TO REVEAL OR PUBLISH IN WHOLE OR PART

APPLE COMPUTER INC.

SIZE	DRAWING NUMBER	REV.
D	051-6949	09

SCALE NONE SHT 23 OF 111

www.teknisi-indonesia.com

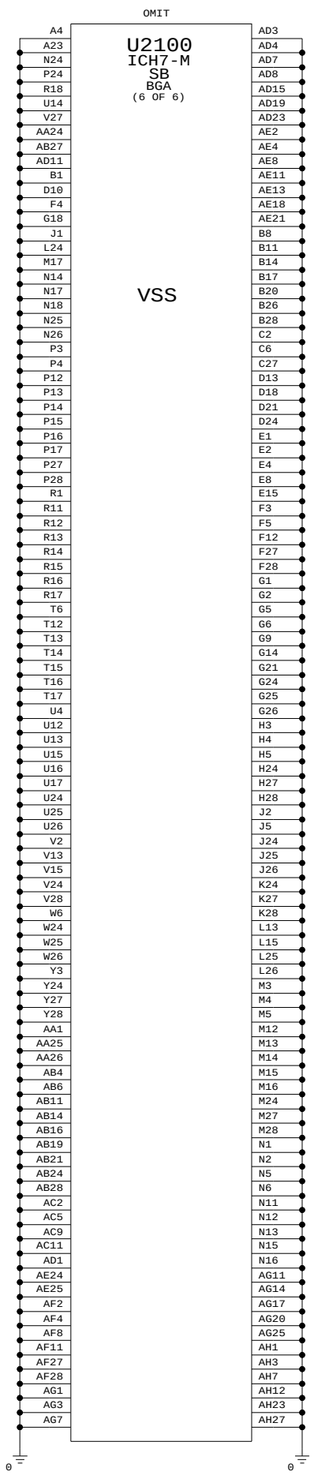

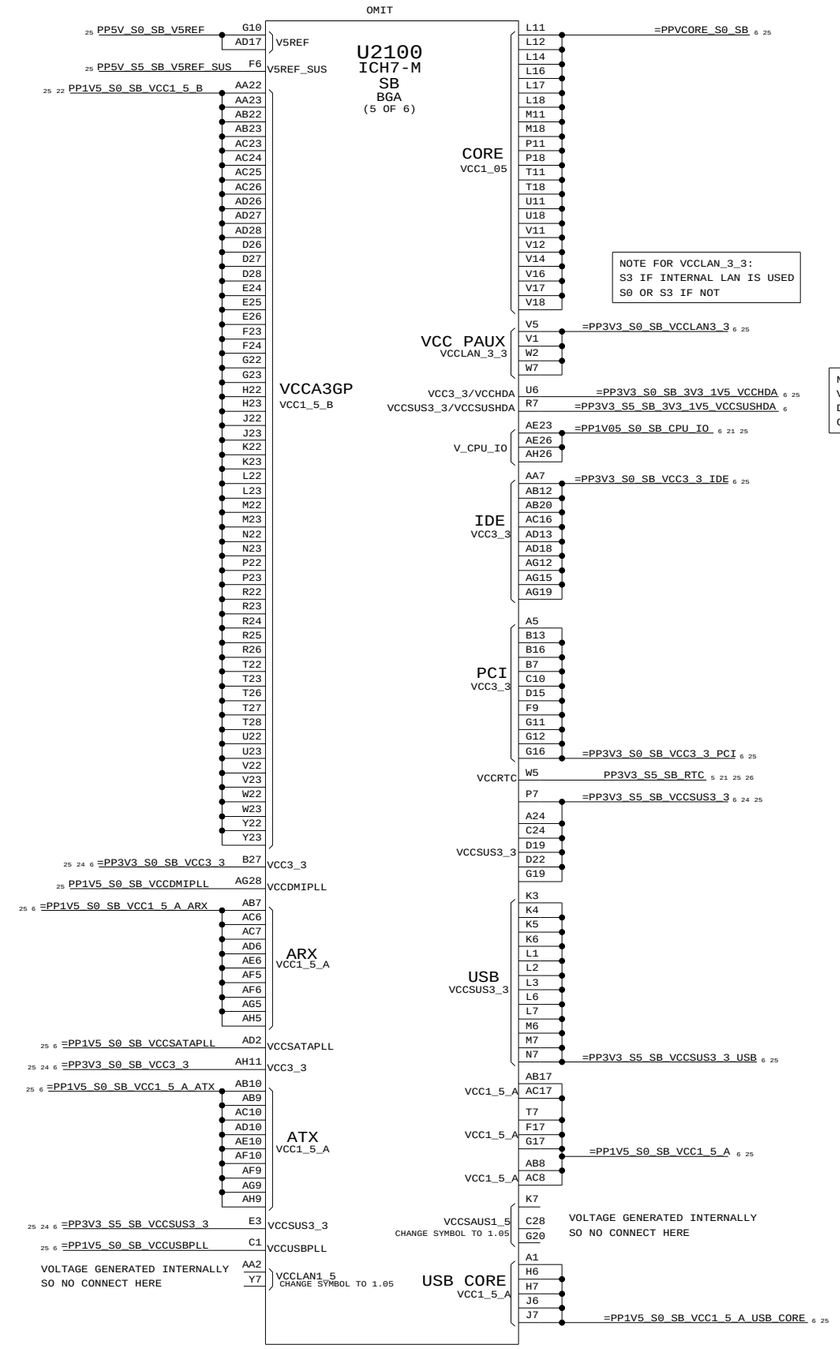

SB: 4 OF 4

SYNC_MASTER=N/A SYNC_DATE=N/A

NOTICE OF PROPRIETARY PROPERTY

THE INFORMATION CONTAINED HEREIN IS THE PROPRIETARY PROPERTY OF APPLE COMPUTER, INC. THE POSSESSOR AGREES TO THE FOLLOWING

I TO MAINTAIN THE DOCUMENT IN CONFIDENCE
II NOT TO REPRODUCE OR COPY IT
III NOT TO REVEAL OR PUBLISH IN WHOLE OR PART

APPLE COMPUTER INC.

SIZE	DRAWING NUMBER	REV.
D	051-6949	09
SCALE NONE	SHT 24 OF 111	

www.teknisi-indonesia.com

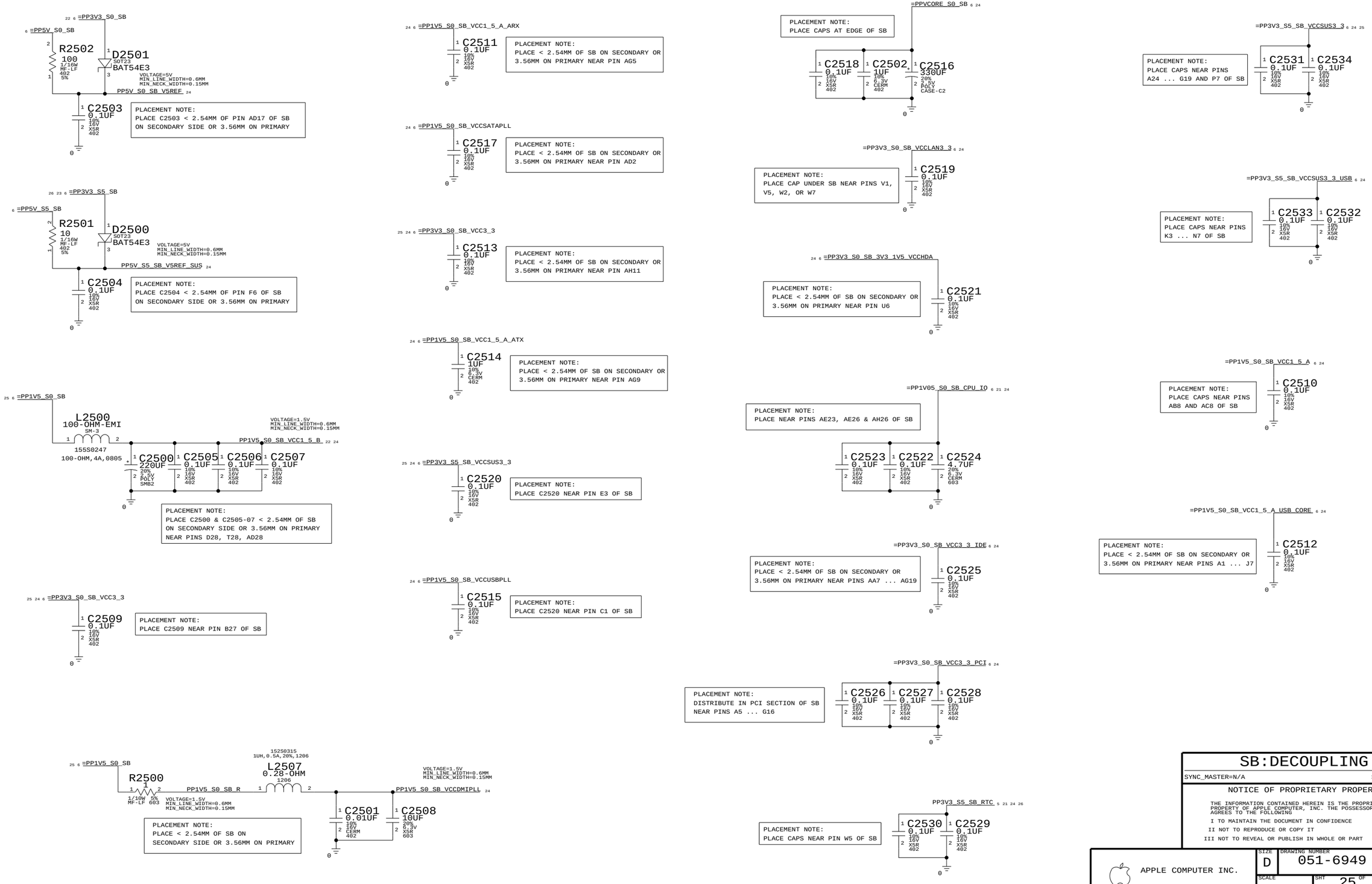

SB:DECOUPLING

SYNC_MASTER=N/A SYNC_DATE=N/A

NOTICE OF PROPRIETARY PROPERTY

THE INFORMATION CONTAINED HEREIN IS THE PROPRIETARY PROPERTY OF APPLE COMPUTER, INC. THE POSSESSOR AGREES TO THE FOLLOWING

I TO MAINTAIN THE DOCUMENT IN CONFIDENCE
II NOT TO REPRODUCE OR COPY IT
III NOT TO REVEAL OR PUBLISH IN WHOLE OR PART

APPLE COMPUTER INC.

SIZE	DRAWING NUMBER	REV.
D	051-6949	09
SCALE NONE	SHT 25 OF 111	

www.teknisi-indonesia.com

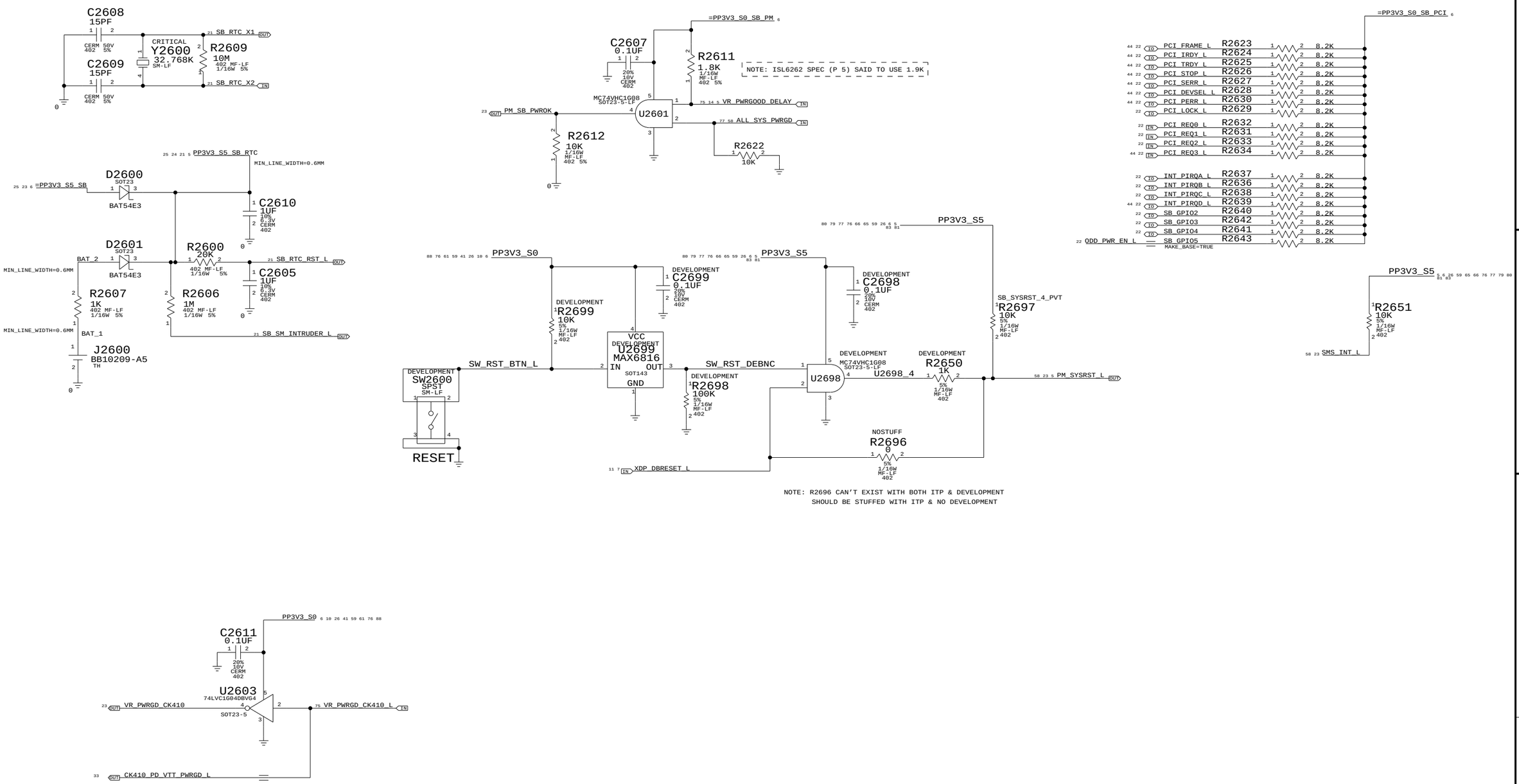

SB: MISC

SYNC_MASTER=N/A SYNC_DATE=N/A

NOTICE OF PROPRIETARY PROPERTY

THE INFORMATION CONTAINED HEREIN IS THE PROPRIETARY PROPERTY OF APPLE COMPUTER, INC. THE POSSESSOR AGREES TO THE FOLLOWING

I TO MAINTAIN THE DOCUMENT IN CONFIDENCE
II NOT TO REPRODUCE OR COPY IT
III NOT TO REVEAL OR PUBLISH IN WHOLE OR PART

APPLE COMPUTER INC.

SIZE	DRAWING NUMBER	REV.
D	051-6949	09
SCALE NONE	SHT 26 OF 111	

www.teknisi-indonesia.com

SB I2C BUSSES

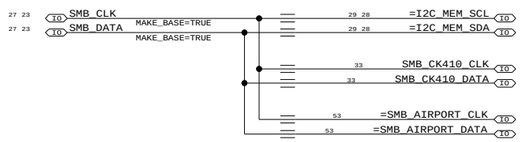

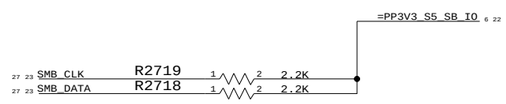

SB: SMB HUB		
SYNC_MASTER=N/A		SYNC_DATE=N/A

NOTICE OF PROPRIETARY PROPERTY

THE INFORMATION CONTAINED HEREIN IS THE PROPRIETARY PROPERTY OF APPLE COMPUTER, INC. THE POSSESSOR AGREES TO THE FOLLOWING

I TO MAINTAIN THE DOCUMENT IN CONFIDENCE

II NOT TO REPRODUCE OR COPY IT

III NOT TO REVEAL OR PUBLISH IN WHOLE OR PART

APPLE COMPUTER INC.

SIZE	DRAWING NUMBER	REV.
D	051-6949	09
SCALE NONE	SHT 27 OF 111	

www.teknisi-indonesia.com

Page Notes

Power aliases required by this page:
- =PP1V8_S3_MEM
- =PPSPD_S0_MEM (2.5V - 3.3V)

Signal aliases required by this page:
- =I2C_MEM_SCL
- =I2C_MEM_SDA

BOM options provided by this page:
(NONE)

DDR2 VRef

One 0.1uF per connector

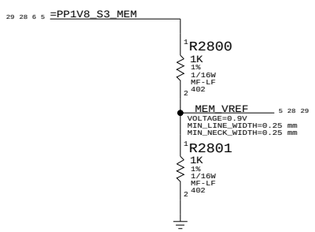

Yellow uses 10K divider and TLV2463
to drive MCH and DIMM connectors.
(See Capell Valley pg 47)

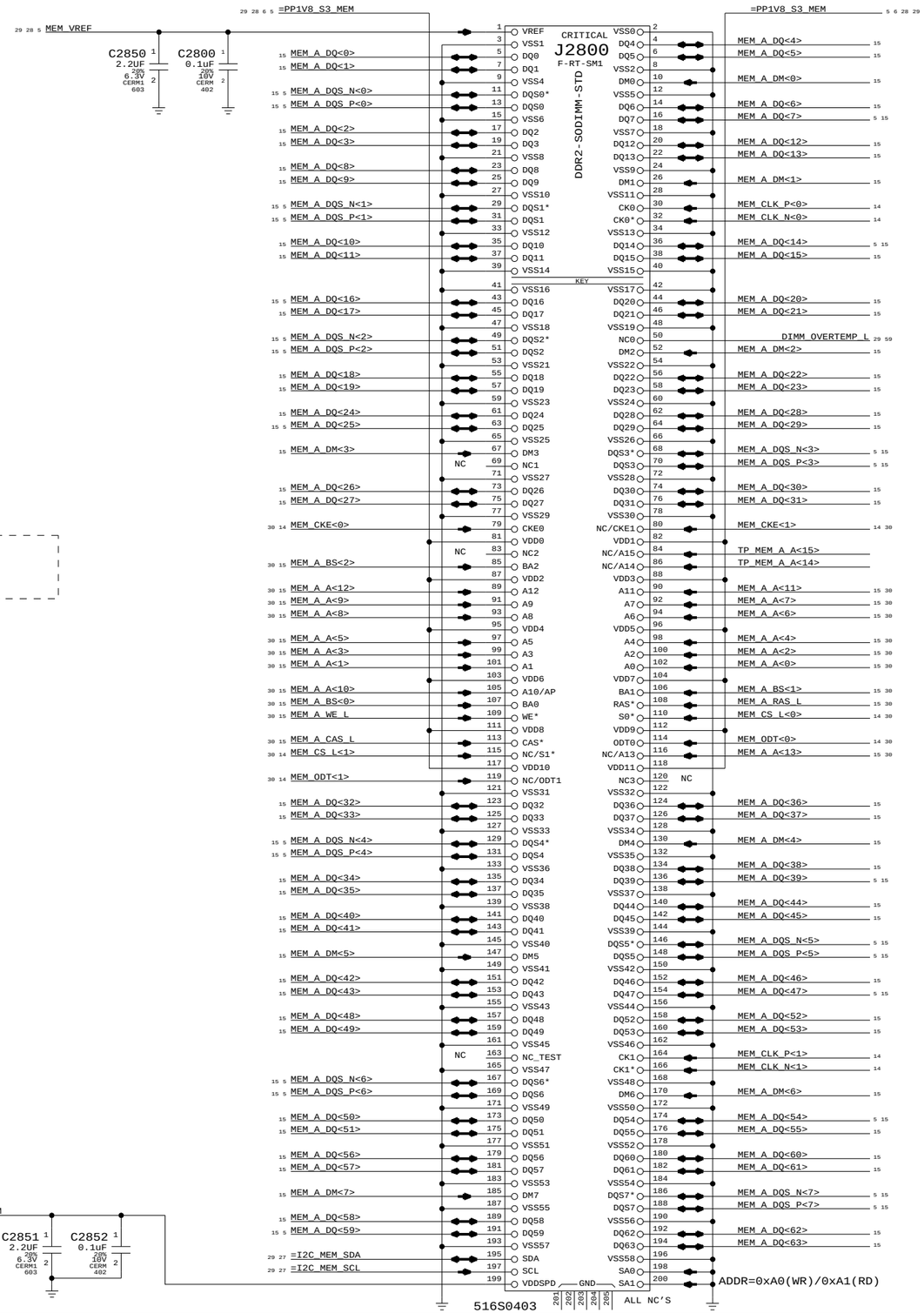

DDR2 Bypass Caps

(For return current)

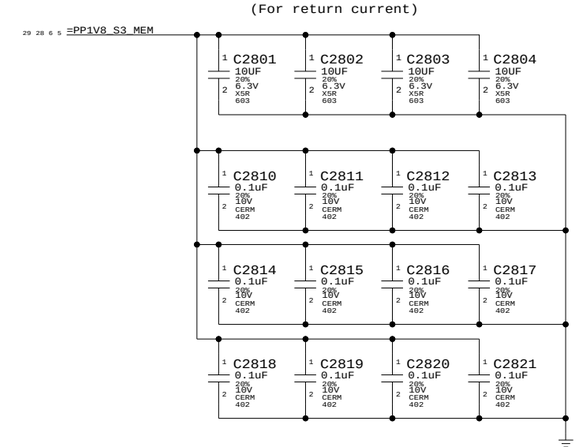

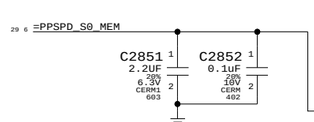

DDR2 SO-DIMM Connector A

SYNC_MASTER=(MASTER) SYNC_DATE=(MASTER)

NOTICE OF PROPRIETARY PROPERTY

THE INFORMATION CONTAINED HEREIN IS THE PROPRIETARY PROPERTY OF APPLE COMPUTER, INC. THE POSSESSOR AGREES TO THE FOLLOWING

I TO MAINTAIN THE DOCUMENT IN CONFIDENCE

II NOT TO REPRODUCE OR COPY IT

III NOT TO REVEAL OR PUBLISH IN WHOLE OR PART

APPLE COMPUTER INC.

SIZE	DRAWING NUMBER	REV.
D	051-6949	09
SCALE NONE	SHT 28 OF 111	

www.teknisi-indonesia.com

Page Notes

Power aliases required by this page:
- =PP1V8_S3_MEM
- =PPSPD_S0_MEM (2.5V - 3.3V)

Signal aliases required by this page:
- =I2C_MEM_SCL
- =I2C_MEM_SDA

BOM options provided by this page:
(NONE)

NOTE: This page does not supply VREF.
The reference voltage must be provided
by another page.

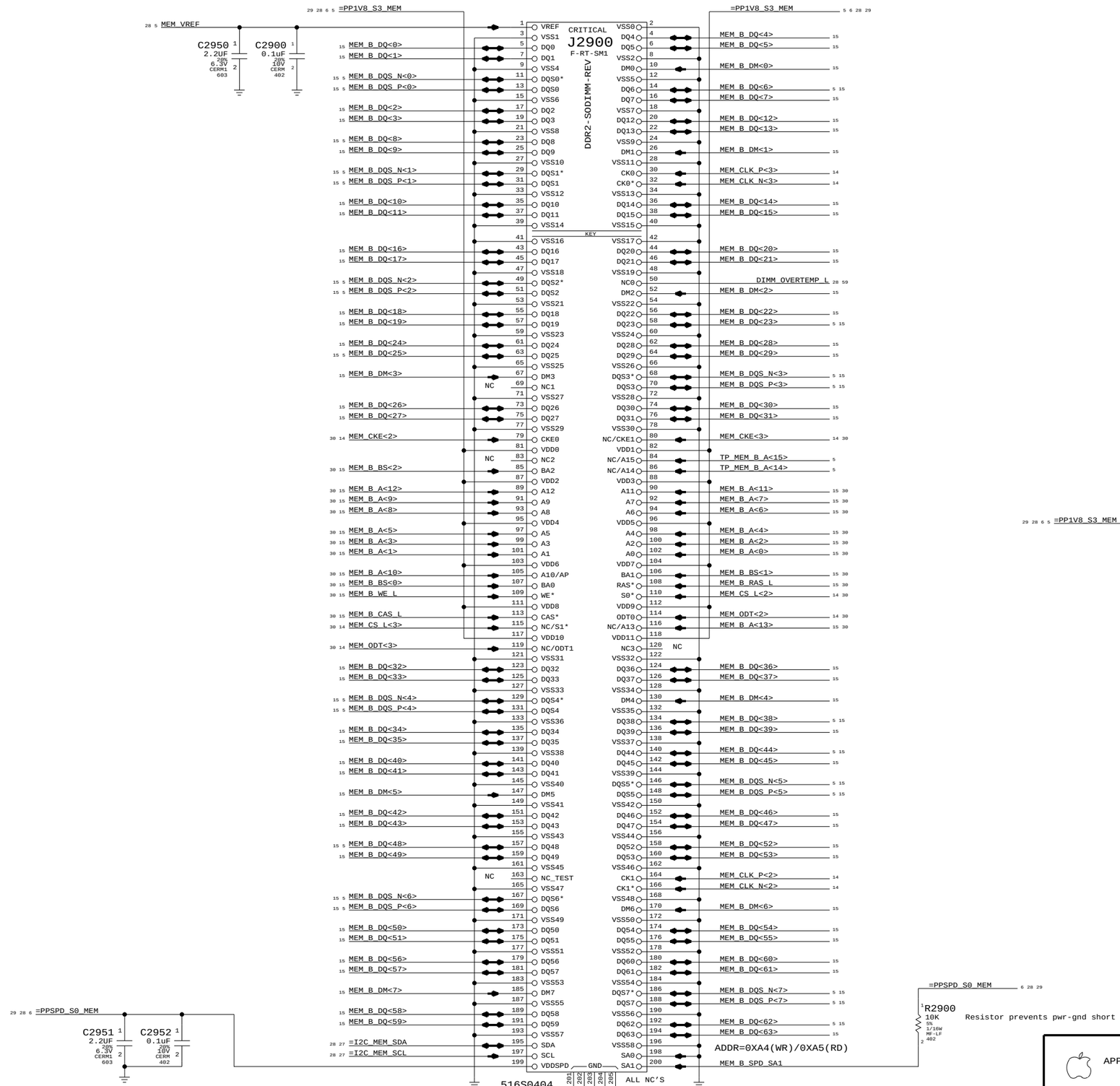

DDR2 Bypass Caps

(For return current)

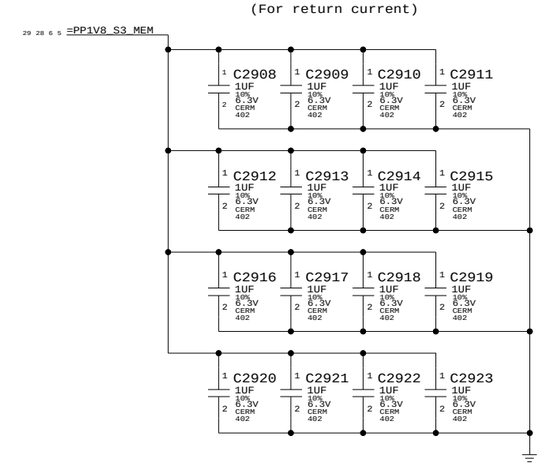

DDR2 SO-DIMM Connector B

SYNC_MASTER=(MASTER) SYNC_DATE=(MASTER)

NOTICE OF PROPRIETARY PROPERTY

THE INFORMATION CONTAINED HEREIN IS THE PROPRIETARY PROPERTY OF APPLE COMPUTER, INC. THE POSSESSOR AGREES TO THE FOLLOWING

I TO MAINTAIN THE DOCUMENT IN CONFIDENCE

II NOT TO REPRODUCE OR COPY IT

III NOT TO REVEAL OR PUBLISH IN WHOLE OR PART

APPLE COMPUTER INC.

SIZE	DRAWING NUMBER	REV.
D	051-6949	09
SCALE NONE	SHT 29 OF 111	

www.teknisi-indonesia.com

One cap for each side of every RPAK, one cap for every two discrete resistors
BOMOPTION shown at the top of each group applies to every part below it

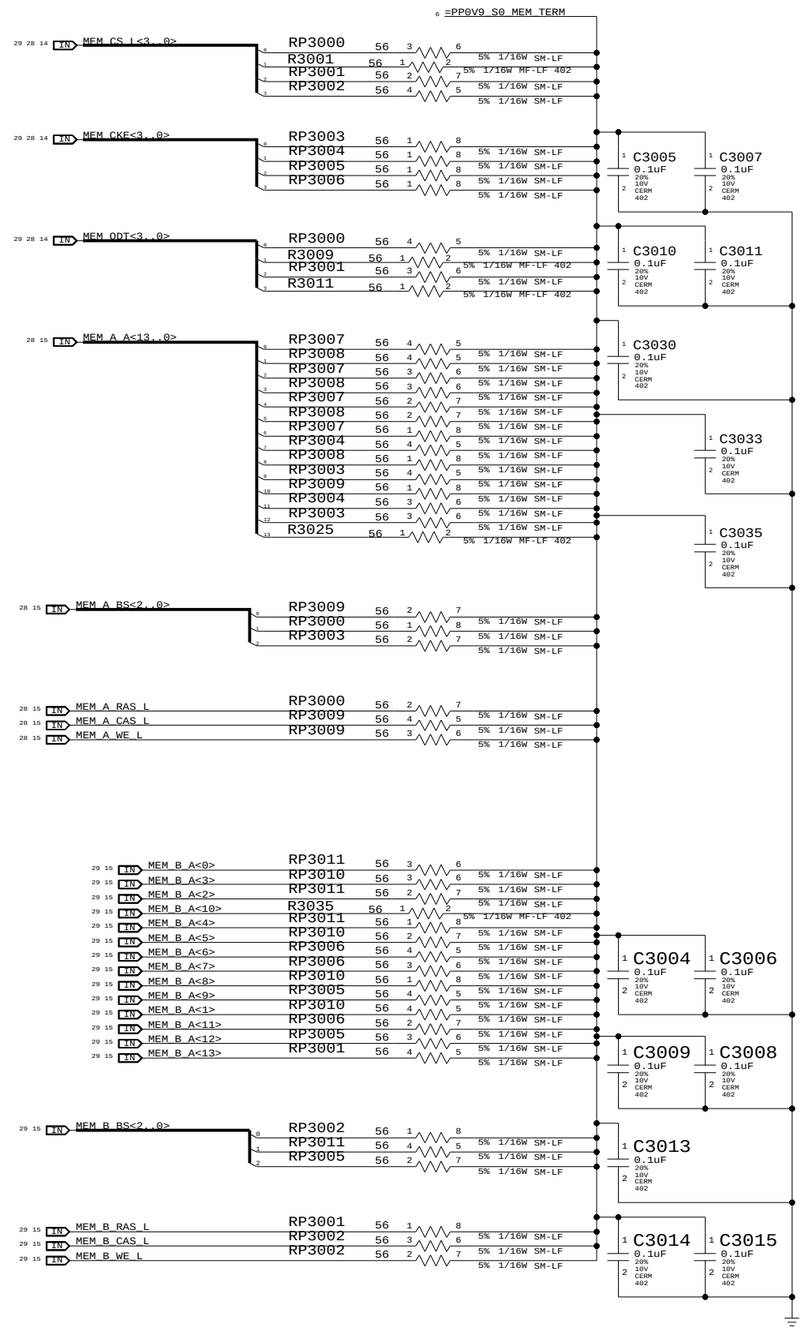

Memory Active Termination

NOTICE OF PROPRIETARY PROPERTY

THE INFORMATION CONTAINED HEREIN IS THE PROPRIETARY PROPERTY OF APPLE COMPUTER, INC. THE POSSESSOR AGREES TO THE FOLLOWING

I TO MAINTAIN THE DOCUMENT IN CONFIDENCE

II NOT TO REPRODUCE OR COPY IT

III NOT TO REVEAL OR PUBLISH IN WHOLE OR PART

APPLE COMPUTER INC.

SIZE	DRAWING NUMBER	REV.
D	051-6949	09
SCALE NONE	SHT 30 OF 111	

www.teknisi-indonesia.com

Page Notes

Power aliases required by this page:
- =PP5V_S0_MEMVTT
- =PP1V8_S0_MEMVTT
- =PP0V9_S0_MEMVTT_LDO

Signal aliases required by this page:
(NONE)

BOM options provided by this page:
(NONE)

DDR2 Vtt Regulator

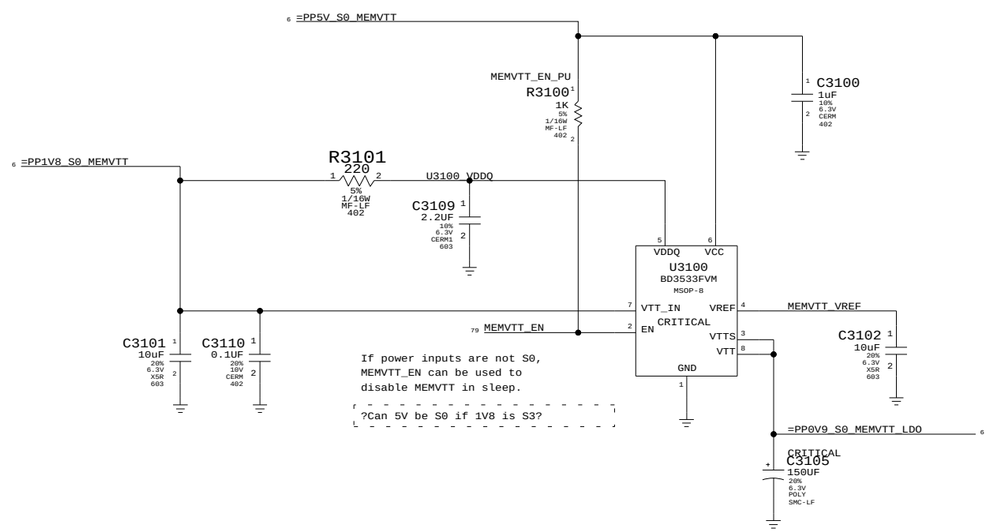

Memory Vtt Supply

SYNC_MASTER=(MASTER) SYNC_DATE=(MASTER)

NOTICE OF PROPRIETARY PROPERTY

THE INFORMATION CONTAINED HEREIN IS THE PROPRIETARY PROPERTY OF APPLE COMPUTER, INC. THE POSSESSOR AGREES TO THE FOLLOWING

I TO MAINTAIN THE DOCUMENT IN CONFIDENCE
II NOT TO REPRODUCE OR COPY IT
III NOT TO REVEAL OR PUBLISH IN WHOLE OR PART

APPLE COMPUTER INC.

SIZE	DRAWING NUMBER	REV.
D	051-6949	09
SCALE NONE	SHT 31 OF 111	

www.teknisi-indonesia.com

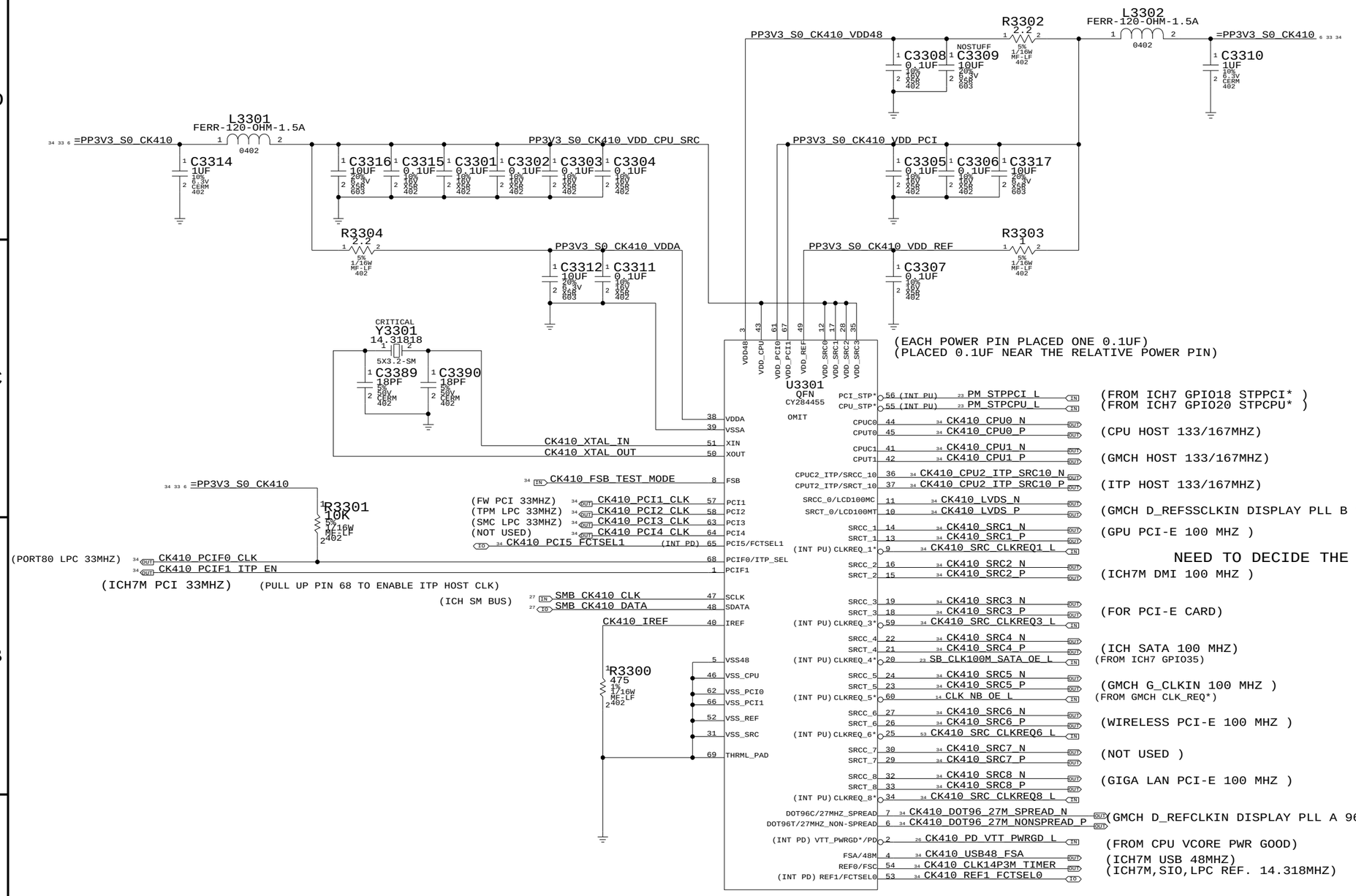

FCTSEL1	FCTSEL0	PIN 6	PIN 7	PIN 10	PIN 11	
0	0	DOT96T	DOT96C	100MT_SST	100MC_SST	* FOR INT. GRAPHIC SYSTEM
0	1	DOT96T	DOT96C	SRCT0	SRCC0	
1	0	27M NON SPREAD	27M SPREAD	SRCT0	SRCC0	* FOR EXT. GRAPHIC SYSTEM
1	1	OFF LOW	TBD	SRCT0	SRCC0	

CLOCKS

SYNC_MASTER=CLOCK SYNC_DATE=06/03/2005

NOTICE OF PROPRIETARY PROPERTY

THE INFORMATION CONTAINED HEREIN IS THE PROPRIETARY PROPERTY OF APPLE COMPUTER, INC. THE POSSESSOR AGREES TO THE FOLLOWING

I TO MAINTAIN THE DOCUMENT IN CONFIDENCE

II NOT TO REPRODUCE OR COPY IT

III NOT TO REVEAL OR PUBLISH IN WHOLE OR PART

APPLE COMPUTER INC.

SIZE	DRAWING NUMBER	REV.
D	051-6949	09

SCALE NONE SHT 33 OF 111

www.teknisi-indonesia.com

NOTE: USE THESE PULL-DOWNS IF NOT CONNECTED TO GPIO'S

33 CK410_SRC_CLKREQ1_L (GPU CLK OE*) — R3495 1K
33 CK410_SRC_CLKREQ3_L (SPARE CLK OE*) — R3494 1K
33 CK410_SRC_CLKREQ8_L (YUKON CLK OE*) — R3493 1K

=PP3V3_S0_CK410 6 33

33 CK410_PCI5_FCTSEL1 — R3499 1K (1/16W 5% MF-LF 402)

R3497 2.2K (5% 1/16W MF-LF 402) — CK410_FSC 34

33 CK410_CLK14P3M_TIMER — R3498 33 (1/16W 5% MF-LF 402) — SB_CLK14P3M_TIMER OUT 5 23

33 CK410_REF1_FCTSEL0 — R3496 33 — TP_CLK14P3M_SPARE OUT

33 CK410_SRC3_P — R3492 33 — SPARE_SRC3_P — R3488 49.9
33 CK410_SRC3_N — R3491 33 — SPARE_SRC3_N — R3487 49.9
33 CK410_SRC7_P — R3490 33 — SPARE_SRC7_P — R3486 49.9
33 CK410_SRC7_N — R3489 33 — SPARE_SRC7_N — R3485 49.9

FSB FREQUENCY SELECT:

	STUFF	NO STUFF
CPU DRIVEN	R3454 R3459 R3463	R3452 R3457 R3461
533MHZ (133MHZ CPU CLK)	R3452 R3457 R3461	R3454 R3459 R3463
667MHZ (166MHZ CPU CLK)	R3452 R3461	R3454 R3459 R3463 R3457

R3451 2.2K (5% 1/16W MF-LF 402) — CK410_FSA 34

33 CK410_USB48_FSA — R3400 33 (1/16W 5% MF-LF 402) — SB_CLK48M_USBCTLR OUT 5 23

33 CK410_PCI4_CLK — R3406 33 — TP_PCI_CLK_SPARE OUT 9

33 CK410_PCI3_CLK — R3405 33 — PCI_CLK_SMC OUT 58
33 CK410_PCI2_CLK — R3404 33 — PCI_CLK_TPM OUT 67
33 CK410_PCI1_CLK — R3403 33 — PCI_CLK_FW OUT 44

33 CK410_PCIF1_ITP_EN — R3401 33 — PCI_CLK_SB OUT 5 22
33 CK410_PCIF0_CLK — R3402 33 — PCI_CLK_PORT80 OUT 60

34 12 5 FSB_CLK_NB_P — R3429 49.9 (1% 402 1/16W MF-LF)
34 12 5 FSB_CLK_NB_N — R3430 49.9
34 7 5 FSB_CLK_CPU_P — R3431 49.9
34 7 5 FSB_CLK_CPU_N — R3432 49.9
34 FSB_CLK_XDP_P — R3433 49.9
34 FSB_CLK_XDP_N — R3434 49.9
53 34 AIRPORT_CLK100M_PCIE_P — R3435 49.9
53 34 AIRPORT_CLK100M_PCIE_N — R3436 49.9
34 14 5 NB_CLK100M_GCLKIN_P — R3438 49.9
34 14 5 NB_CLK100M_GCLKIN_N — R3437 49.9
34 21 5 SB_CLK100M_SATA_P — R3439 49.9
34 21 5 SB_CLK100M_SATA_N — R3440 49.9
34 22 5 SB_CLK100M_DMI_P — R3442 49.9
34 22 5 SB_CLK100M_DMI_N — R3441 49.9
41 34 5 ENET_CLK100M_PCIE_P — R3443 49.9
41 34 5 ENET_CLK100M_PCIE_N — R3444 49.9
84 34 5 GPU_CLK100M_PCIE_P — R3446 49.9
84 34 5 GPU_CLK100M_PCIE_N — R3445 49.9

81 34 6 PP1V05_S0

14 NB_BSEL<0> — R3453 1K (1/16W 5% MF-LF 402)
34 CK410_FSA
R3455 1K (1/16W 5% MF-LF 402)
7 CPU_BSEL<0>
NOSTUFF R3452 56 (5% 1/16W MF-LF 402)
R3454 0 (5% 1/16W MF-LF 402)

81 34 6 PP1V05_S0

14 NB_BSEL<1> — R3458 1K (1/16W 5% MF-LF 402)
33 CK410_FSB_TEST_MODE
7 CPU_BSEL<1>
R3456 1K (5% 1/16W MF-LF 402)
NOSTUFF R3457 0 (5% 1/16W MF-LF 402)
R3459 0 (5% 1/16W MF-LF 402)

81 34 6 PP1V05_S0

14 NB_BSEL<2> — R3462 1K (1/16W 5% MF-LF 402)
34 CK410_FSC
7 CPU_BSEL<2>
R3460 1K (5% 1/16W MF-LF 402)
NOSTUFF R3461 0 (5% 1/16W MF-LF 402)
R3463 0 (5% 1/16W MF-LF 402)

33 CK410_CPU1_P — 33 — R3407 — FSB_CLK_NB_P OUT 5 12 34
33 CK410_CPU1_N — 33 — R3408 — FSB_CLK_NB_N OUT 5 12 34
33 CK410_CPU0_P — 33 — R3409 — FSB_CLK_CPU_P OUT 5 7 34
33 CK410_CPU0_N — 33 — R3410 — FSB_CLK_CPU_N OUT 5 7 34

33 CK410_CPU2_ITP_SRC10_P — 33 — R3411 — 34 FSB_CLK_XDP_P (MAKE_BASE=TRUE) — CPU_XDP_CLK_P 11
33 CK410_CPU2_ITP_SRC10_N — 33 — R3412 — 34 FSB_CLK_XDP_N (MAKE_BASE=TRUE) — CPU_XDP_CLK_N 11

33 CK410_SRC6_P — 33 — R3413 — AIRPORT_CLK100M_PCIE_P OUT 34 53
33 CK410_SRC6_N — 33 — R3414 — AIRPORT_CLK100M_PCIE_N OUT 34 53
33 CK410_SRC5_P — 33 — R3415 — NB_CLK100M_GCLKIN_P OUT 5 14 34
33 CK410_SRC5_N — 33 — R3416 — NB_CLK100M_GCLKIN_N OUT 5 14 34
33 CK410_SRC4_P — 33 — R3417 — SB_CLK100M_SATA_P OUT 5 21 34
33 CK410_SRC4_N — 33 — R3418 — SB_CLK100M_SATA_N OUT 5 21 34
33 CK410_SRC2_P — 33 — R3419 — SB_CLK100M_DMI_P OUT 5 22 34
33 CK410_SRC2_N — 33 — R3420 — SB_CLK100M_DMI_N OUT 5 22 34
33 CK410_SRC8_P — 33 — R3421 — ENET_CLK100M_PCIE_P OUT 5 34 41
33 CK410_SRC8_N — 33 — R3422 — ENET_CLK100M_PCIE_N OUT 5 34 41
33 CK410_SRC1_P — 33 — R3423 — GPU_CLK100M_PCIE_P OUT 5 34 84
33 CK410_SRC1_N — 33 — R3424 — GPU_CLK100M_PCIE_N OUT 5 34 84

33 CK410_LVDS_P — TP_CK410_LVDS_P
33 CK410_LVDS_N — TP_CK410_LVDS_N

33 CK410_DOT96_27M_SPREAD_N — 33 — R3470 — CK410_27M_SPREAD OUT 92
33 CK410_DOT96_27M_NONSPREAD_P — 33 — R3471 — CK410_27M_NONSPREAD OUT 92

CLOCKS: TERMINATIONS

SYNC_MASTER=N/A SYNC_DATE=N/A

NOTICE OF PROPRIETARY PROPERTY

THE INFORMATION CONTAINED HEREIN IS THE PROPRIETARY PROPERTY OF APPLE COMPUTER, INC. THE POSSESSOR AGREES TO THE FOLLOWING

I TO MAINTAIN THE DOCUMENT IN CONFIDENCE
II NOT TO REPRODUCE OR COPY IT
III NOT TO REVEAL OR PUBLISH IN WHOLE OR PART

APPLE COMPUTER INC.

SIZE	DRAWING NUMBER	REV.
D	051-6949	09
SCALE NONE	SHT 34 OF 111	

www.teknisi-indonesia.com

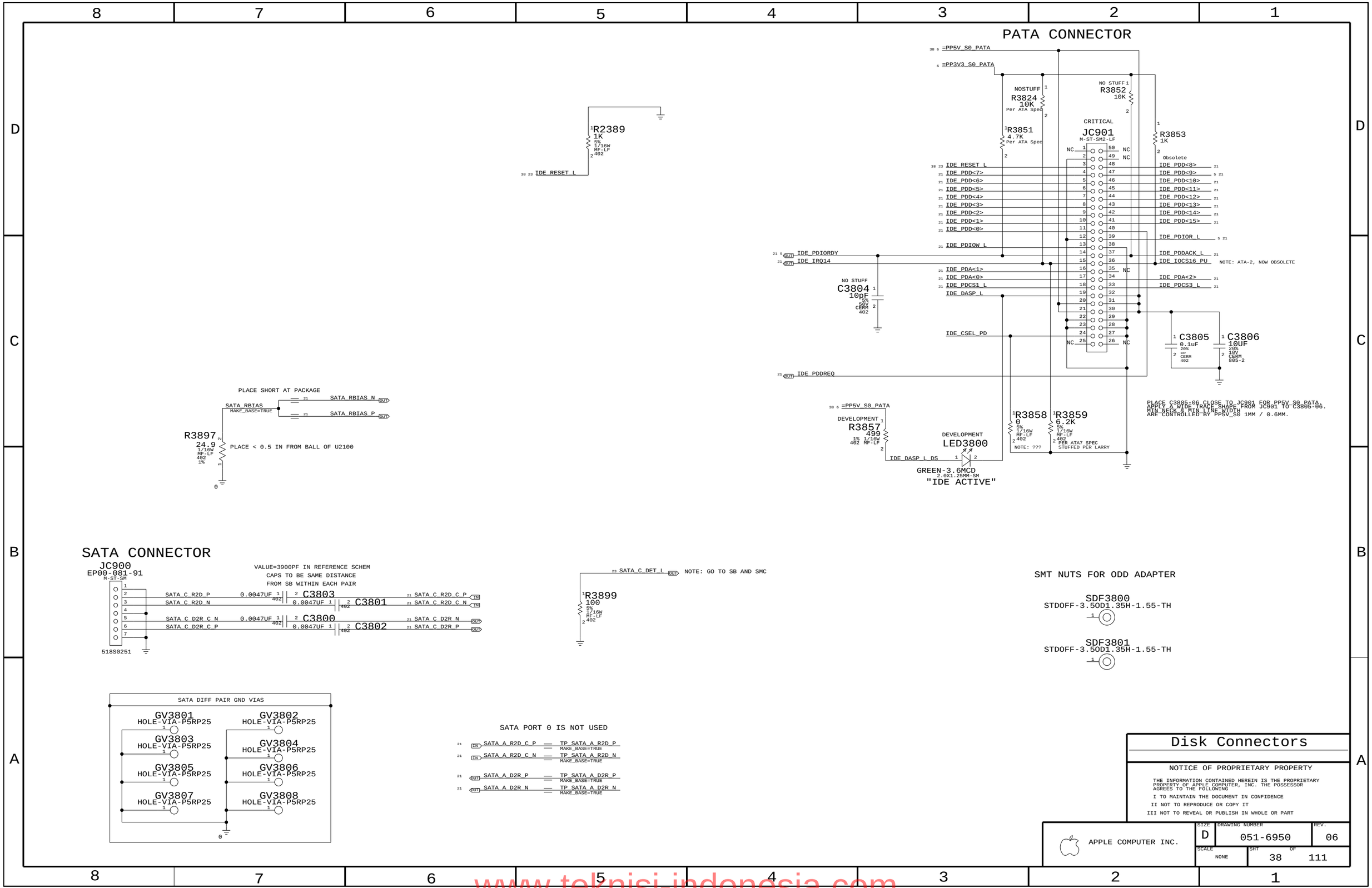

www.teknisi-indonesia.com

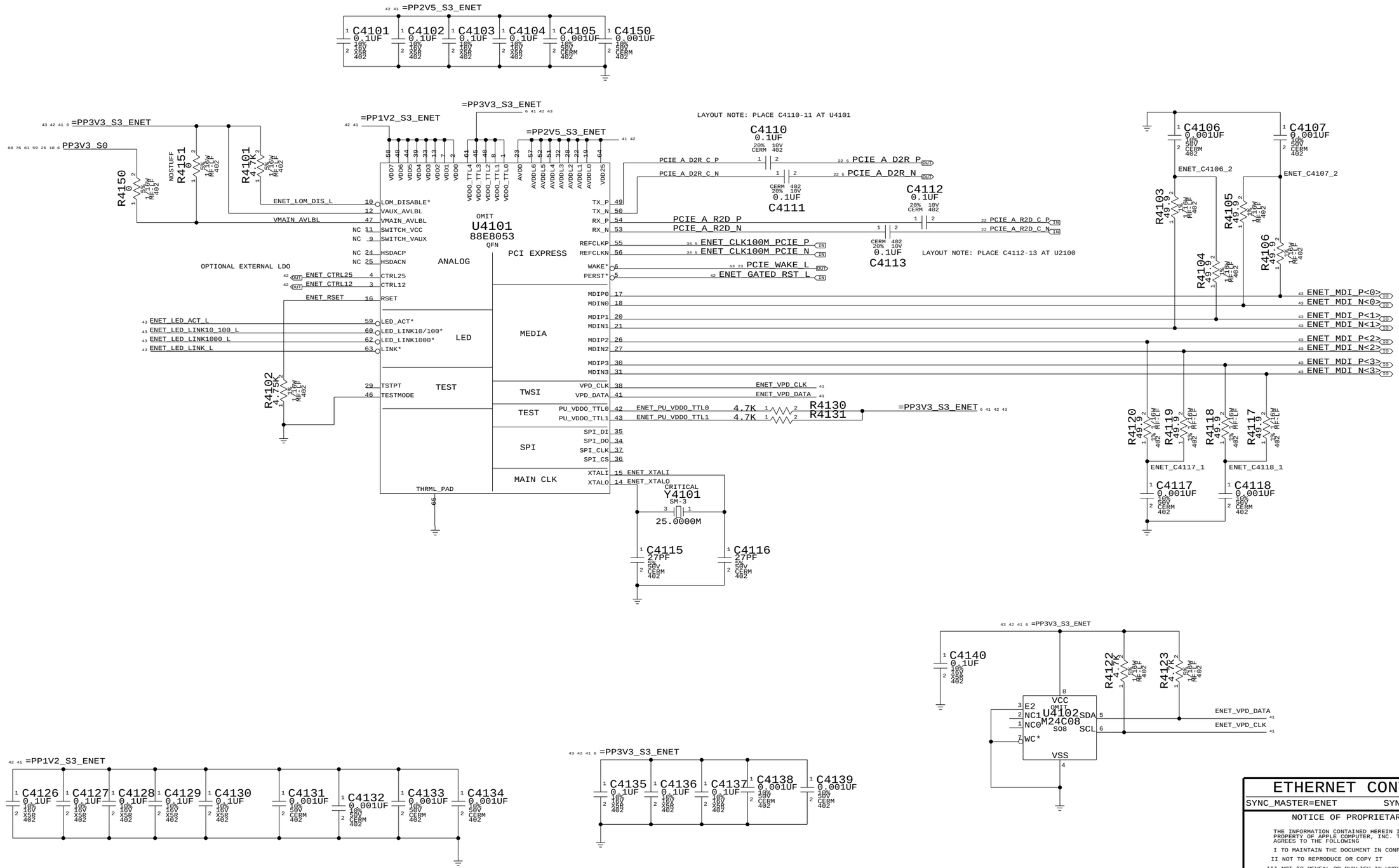

ETHERNET CONTROLLER

SYNC_MASTER=ENET SYNC_DATE=06/22/2005

NOTICE OF PROPRIETARY PROPERTY

THE INFORMATION CONTAINED HEREIN IS THE PROPRIETARY PROPERTY OF APPLE COMPUTER, INC. THE POSSESSOR AGREES TO THE FOLLOWING

I TO MAINTAIN THE DOCUMENT IN CONFIDENCE

II NOT TO REPRODUCE OR COPY IT

III NOT TO REVEAL OR PUBLISH IN WHOLE OR PART

APPLE COMPUTER INC.

SIZE	DRAWING NUMBER	REV.
D	051-6949	09

SCALE NONE SHT 41 OF 111

www.teknisi-indonesia.com

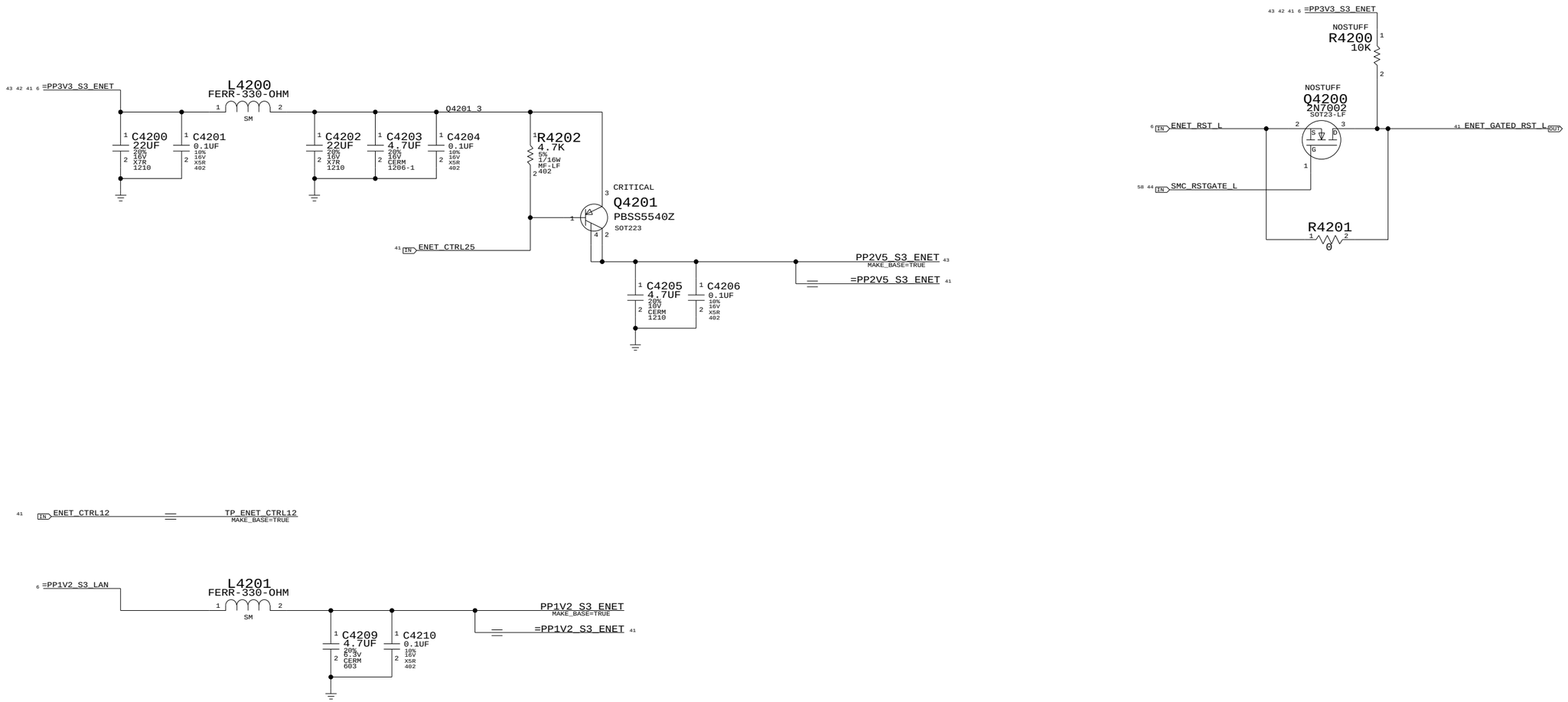

ETHERNET MISC

NOTICE OF PROPRIETARY PROPERTY

THE INFORMATION CONTAINED HEREIN IS THE PROPRIETARY PROPERTY OF APPLE COMPUTER, INC. THE POSSESSOR AGREES TO THE FOLLOWING

I TO MAINTAIN THE DOCUMENT IN CONFIDENCE

II NOT TO REPRODUCE OR COPY IT

III NOT TO REVEAL OR PUBLISH IN WHOLE OR PART

APPLE COMPUTER INC.

SIZE	DRAWING NUMBER	REV.
D	051-6949	09
SCALE NONE	SHT 42 OF 111	

www.teknisi-indonesia.com

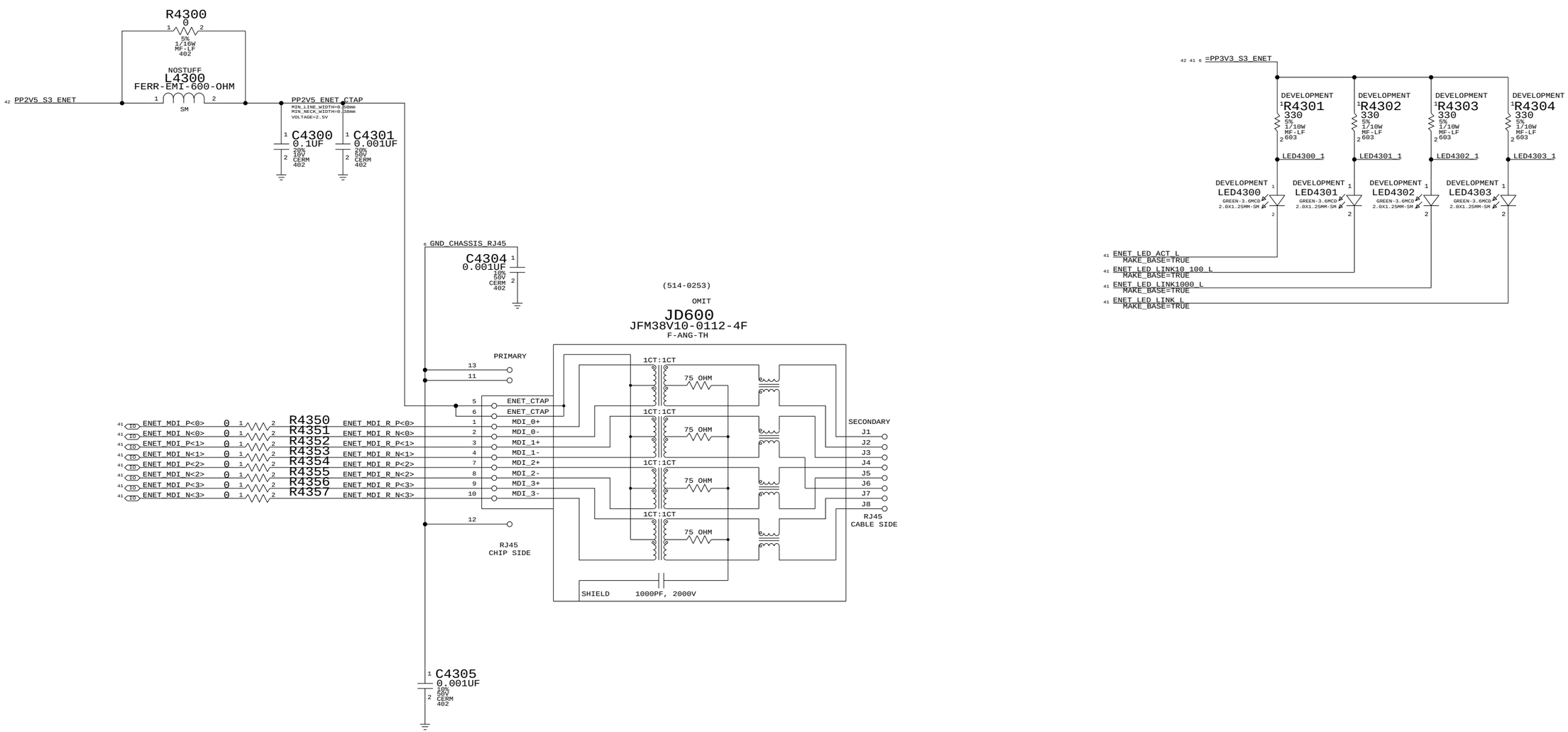

PART#	QTY	DESCRIPTION	REFERENCE DESIGNATOR(S)	CRITICAL	BOM OPTION
514-0300	1	CON,RJ-45 7 DEGRESS	JD600	CRITICAL	17_INCH_LCD
514-0301	1	CON,RJ-45 7 DEGRESS	JD600	CRITICAL	20_INCH_LCD

ETHERNET CONNECTOR

NOTICE OF PROPRIETARY PROPERTY

THE INFORMATION CONTAINED HEREIN IS THE PROPRIETARY PROPERTY OF APPLE COMPUTER, INC. THE POSSESSOR AGREES TO THE FOLLOWING

I TO MAINTAIN THE DOCUMENT IN CONFIDENCE

II NOT TO REPRODUCE OR COPY IT

III NOT TO REVEAL OR PUBLISH IN WHOLE OR PART

APPLE COMPUTER INC.

SIZE	DRAWING NUMBER	REV.
D	051-6949	09
SCALE NONE	SHT 43	OF 111

www.teknisi-indonesia.com

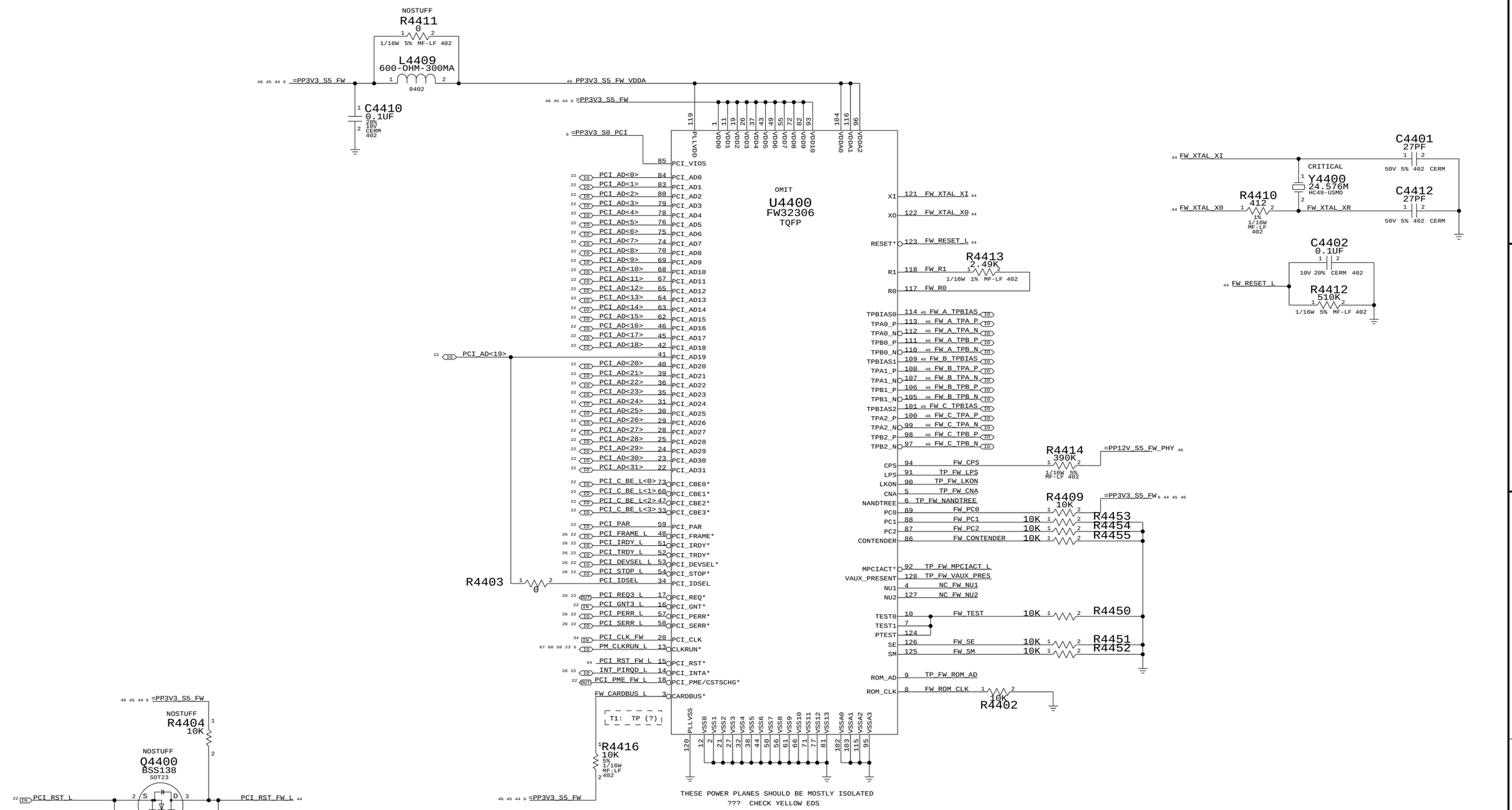

FW: FW323-06

SYNC_MASTER=N/A SYNC_DATE=N/A

NOTICE OF PROPRIETARY PROPERTY

THE INFORMATION CONTAINED HEREIN IS THE PROPRIETARY PROPERTY OF APPLE COMPUTER, INC. THE POSSESSOR AGREES TO THE FOLLOWING

I TO MAINTAIN THE DOCUMENT IN CONFIDENCE

II NOT TO REPRODUCE OR COPY IT

III NOT TO REVEAL OR PUBLISH IN WHOLE OR PART

APPLE COMPUTER INC.

SIZE	DRAWING NUMBER	REV.
D	051-6949	09
SCALE NONE	SHT 44 OF 111	

www.teknisi-indonesia.com

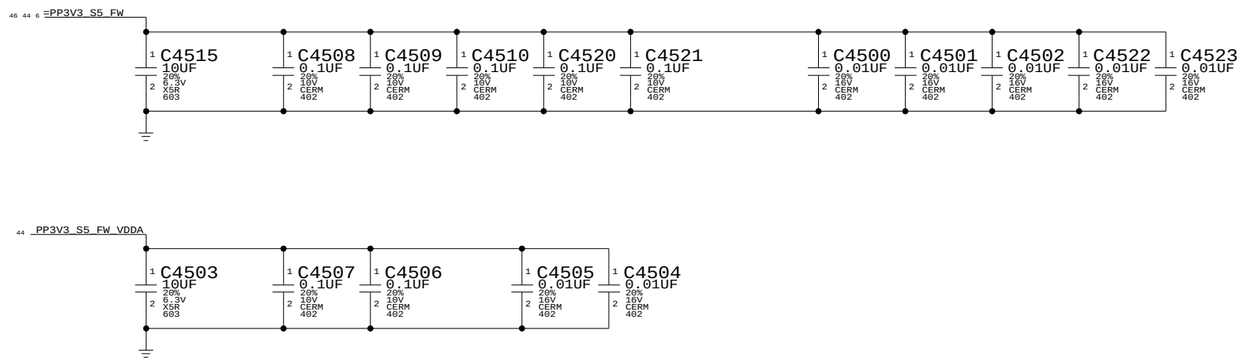

FW: DECAPS

SYNC_MASTER=N/A SYNC_DATE=N/A

NOTICE OF PROPRIETARY PROPERTY

THE INFORMATION CONTAINED HEREIN IS THE PROPRIETARY PROPERTY OF APPLE COMPUTER, INC. THE POSSESSOR AGREES TO THE FOLLOWING

I TO MAINTAIN THE DOCUMENT IN CONFIDENCE

II NOT TO REPRODUCE OR COPY IT

III NOT TO REVEAL OR PUBLISH IN WHOLE OR PART

APPLE COMPUTER INC.

SIZE	DRAWING NUMBER	REV.
D	051-6949	09
SCALE NONE	SHT 45 OF 111	

www.teknisi-indonesia.com

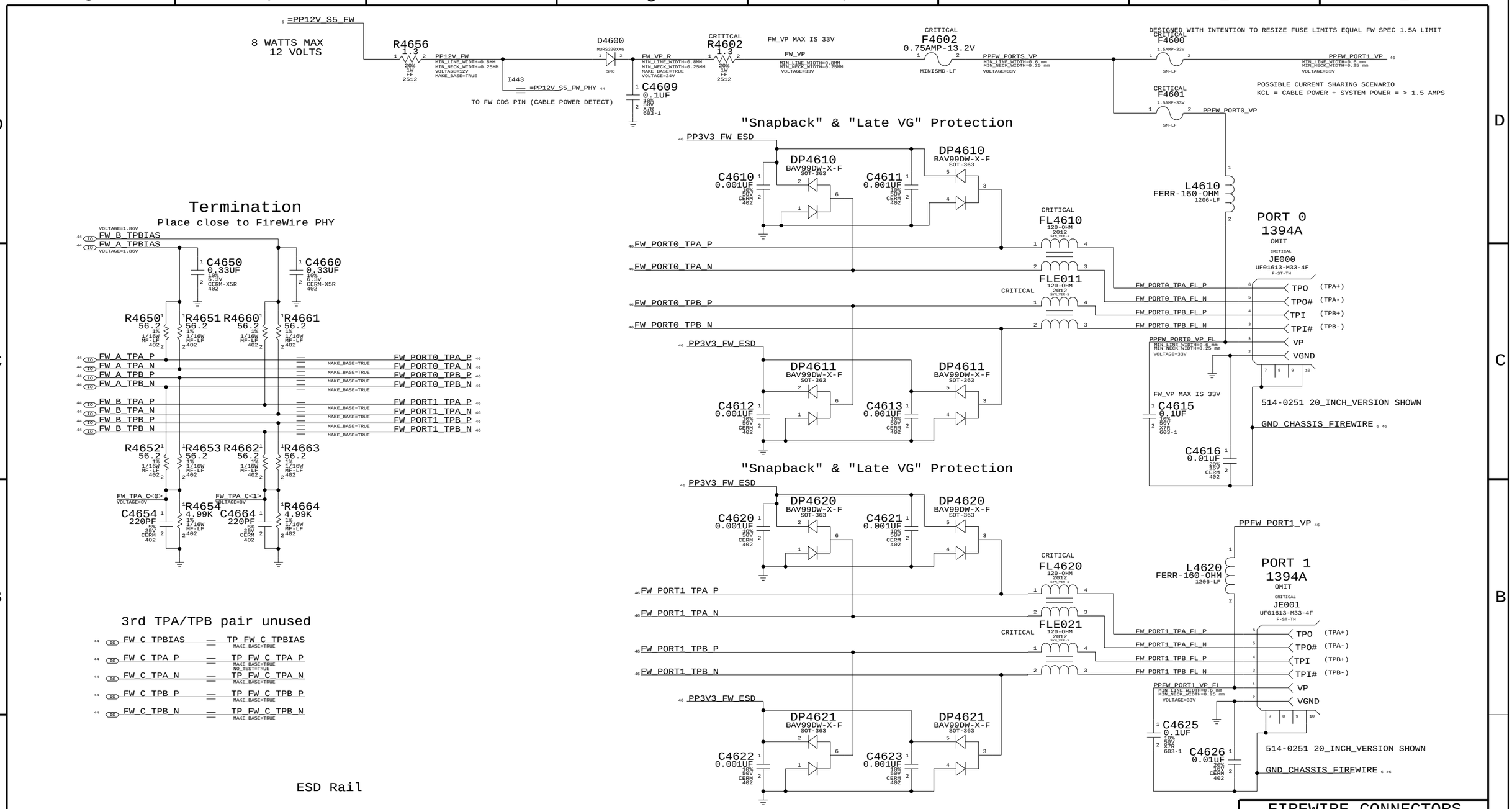

PART#	QTY	DESCRIPTION	REFERENCE DESIGNATOR(S)	CRITICAL	BOM OPTION
514-0248	1	CON,1394A 7 DEGREES	JE000	CRITICAL	17_INCH_LCD
514-0248	1	CON,1394A 7 DEGREES	JE001	CRITICAL	17_INCH_LCD
514-0251	1	CON,1394A 7 DEGREES	JE000	CRITICAL	20_INCH_LCD
514-0251	1	CON,1394A 7 DEGREES	JE001	CRITICAL	20_INCH_LCD

FIREWIRE CONNECTORS

NOTICE OF PROPRIETARY PROPERTY

THE INFORMATION CONTAINED HEREIN IS THE PROPRIETARY PROPERTY OF APPLE COMPUTER, INC. THE POSSESSOR AGREES TO THE FOLLOWING

I TO MAINTAIN THE DOCUMENT IN CONFIDENCE

II NOT TO REPRODUCE OR COPY IT

III NOT TO REVEAL OR PUBLISH IN WHOLE OR PART

APPLE COMPUTER INC.

SIZE	DRAWING NUMBER	REV.
D	051-6949	09
SCALE NONE	SHT 46 OF 111	

www.teknisi-indonesia.com

External USB Ports

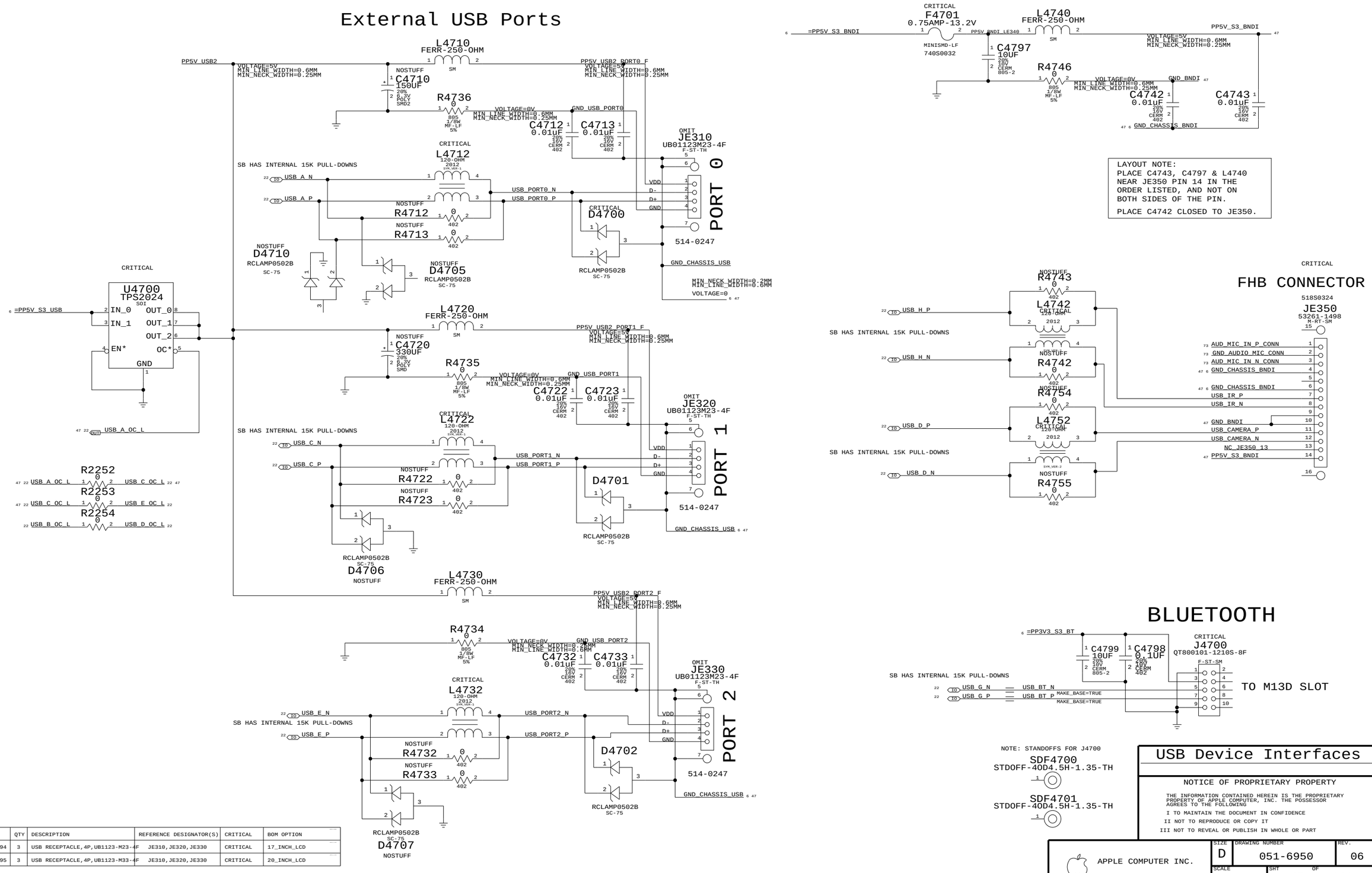

PART#	QTY	DESCRIPTION	REFERENCE DESIGNATOR(S)	CRITICAL	BOM OPTION
514-0294	3	USB RECEPTACLE,4P,UB1123-M23-4F	JE310,JE320,JE330	CRITICAL	17_INCH_LCD
514-0295	3	USB RECEPTACLE,4P,UB1123-M33-4F	JE310,JE320,JE330	CRITICAL	20_INCH_LCD

USB Device Interfaces

NOTICE OF PROPRIETARY PROPERTY

THE INFORMATION CONTAINED HEREIN IS THE PROPRIETARY PROPERTY OF APPLE COMPUTER, INC. THE POSSESSOR AGREES TO THE FOLLOWING

I TO MAINTAIN THE DOCUMENT IN CONFIDENCE

II NOT TO REPRODUCE OR COPY IT

III NOT TO REVEAL OR PUBLISH IN WHOLE OR PART

APPLE COMPUTER INC.

SIZE	DRAWING NUMBER	REV.
D	051-6950	06

SCALE NONE — SHT 47 OF 111

www.teknisi-indonesia.com

BLANK

NOTICE OF PROPRIETARY PROPERTY

THE INFORMATION CONTAINED HEREIN IS THE PROPRIETARY PROPERTY OF APPLE COMPUTER, INC. THE POSSESSOR AGREES TO THE FOLLOWING

I TO MAINTAIN THE DOCUMENT IN CONFIDENCE

II NOT TO REPRODUCE OR COPY IT

III NOT TO REVEAL OR PUBLISH IN WHOLE OR PART

APPLE COMPUTER INC.

SIZE	DRAWING NUMBER	REV.
D	051-6949	09
SCALE NONE	SHT 48 OF 111	

www.teknisi-indonesia.com

CARD-READER USB CONN

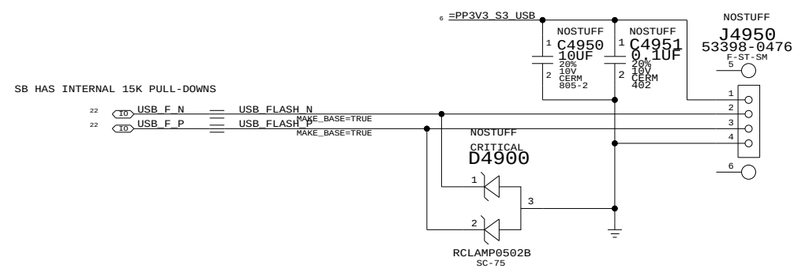

Flash Connector

NOTICE OF PROPRIETARY PROPERTY

THE INFORMATION CONTAINED HEREIN IS THE PROPRIETARY PROPERTY OF APPLE COMPUTER, INC. THE POSSESSOR AGREES TO THE FOLLOWING

I TO MAINTAIN THE DOCUMENT IN CONFIDENCE

II NOT TO REPRODUCE OR COPY IT

III NOT TO REVEAL OR PUBLISH IN WHOLE OR PART

APPLE COMPUTER INC.

SIZE	DRAWING NUMBER	REV.
D	051-6949	09

SCALE NONE

SHT 49 OF 111

www.teknisi-indonesia.com

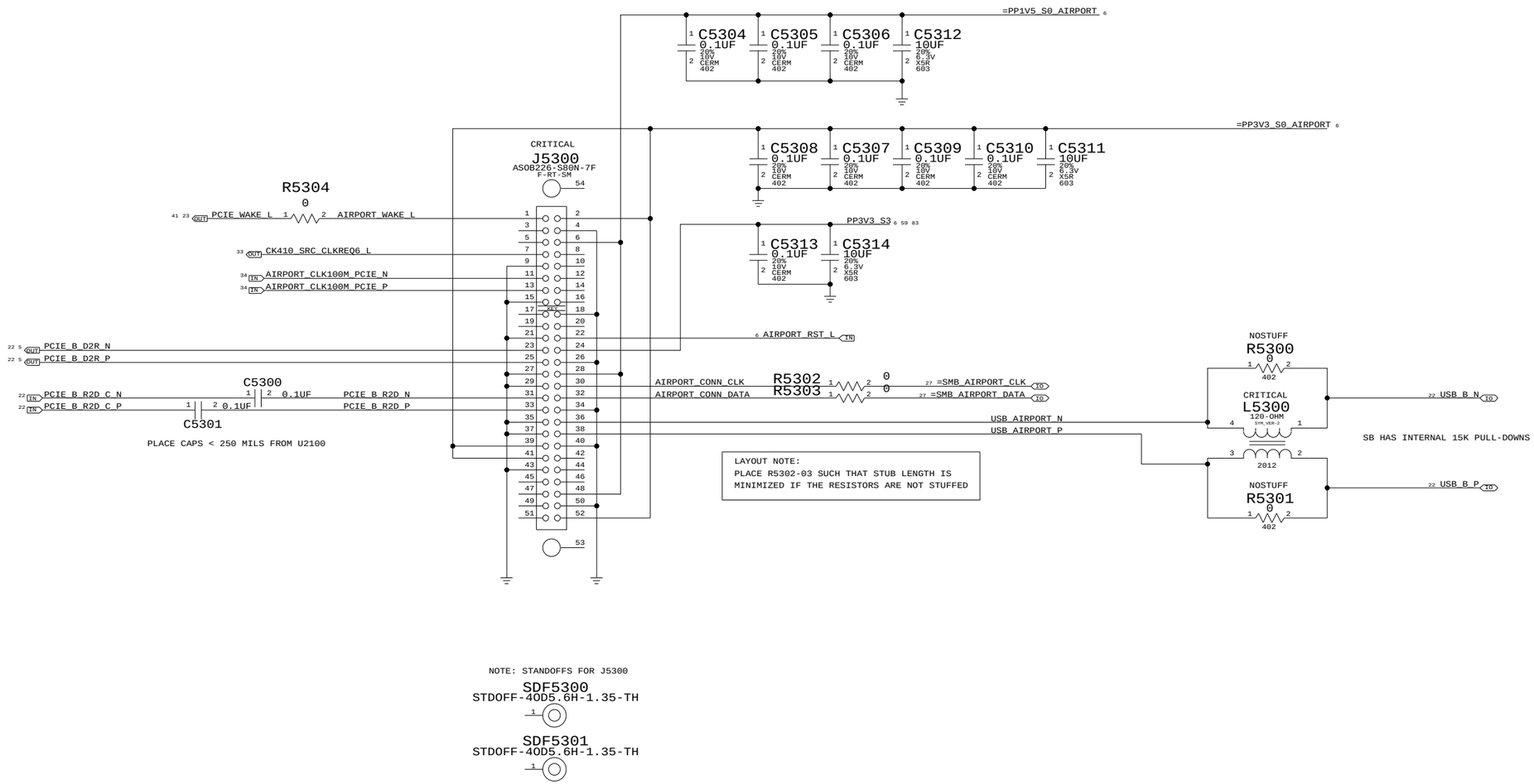

AIRPORT CONN

SYNC_MASTER=N/A SYNC_DATE=N/A

NOTICE OF PROPRIETARY PROPERTY

THE INFORMATION CONTAINED HEREIN IS THE PROPRIETARY PROPERTY OF APPLE COMPUTER, INC. THE POSSESSOR AGREES TO THE FOLLOWING

I TO MAINTAIN THE DOCUMENT IN CONFIDENCE
II NOT TO REPRODUCE OR COPY IT
III NOT TO REVEAL OR PUBLISH IN WHOLE OR PART

APPLE COMPUTER INC.

SIZE	DRAWING NUMBER	REV.
D	051-6949	09
SCALE NONE	SHT 53 OF 111	

www.teknisi-indonesia.com

22	IN	PCIE_C_R2D_C_N	TP_PCIE_C_R2D_C_N (MAKE_BASE=TRUE)
22	IN	PCIE_C_R2D_C_P	TP_PCIE_C_R2D_C_P (MAKE_BASE=TRUE)
22	OUT	PCIE_C_D2R_N	TP_PCIE_C_D2R_N (MAKE_BASE=TRUE)
22	OUT	PCIE_C_D2R_P	TP_PCIE_C_D2R_P (MAKE_BASE=TRUE)
22	IN	PCIE_D_R2D_C_N	TP_PCIE_D_R2D_C_N (MAKE_BASE=TRUE)
22	IN	PCIE_D_R2D_C_P	TP_PCIE_D_R2D_C_P (MAKE_BASE=TRUE)
22	OUT	PCIE_D_D2R_N	TP_PCIE_D_D2R_N (MAKE_BASE=TRUE)
22	OUT	PCIE_D_D2R_P	TP_PCIE_D_D2R_P (MAKE_BASE=TRUE)
22	IN	PCIE_E_R2D_C_N	TP_PCIE_E_R2D_C_N (MAKE_BASE=TRUE)
22	IN	PCIE_E_R2D_C_P	TP_PCIE_E_R2D_C_P (MAKE_BASE=TRUE)
22	OUT	PCIE_E_D2R_N	TP_PCIE_E_D2R_N (MAKE_BASE=TRUE)
22	OUT	PCIE_E_D2R_P	TP_PCIE_E_D2R_P (MAKE_BASE=TRUE)
22	IN	PCIE_F_R2D_C_N	TP_PCIE_F_R2D_C_N (MAKE_BASE=TRUE)
22	IN	PCIE_F_R2D_C_P	TP_PCIE_F_R2D_C_P (MAKE_BASE=TRUE)
22	OUT	PCIE_F_D2R_N	TP_PCIE_F_D2R_N (MAKE_BASE=TRUE)
22	OUT	PCIE_F_D2R_P	TP_PCIE_F_D2R_P (MAKE_BASE=TRUE)

PCIE UNUSED PORTS

SYNC_MASTER=N/A SYNC_DATE=N/A

NOTICE OF PROPRIETARY PROPERTY

THE INFORMATION CONTAINED HEREIN IS THE PROPRIETARY PROPERTY OF APPLE COMPUTER, INC. THE POSSESSOR AGREES TO THE FOLLOWING

I TO MAINTAIN THE DOCUMENT IN CONFIDENCE

II NOT TO REPRODUCE OR COPY IT

III NOT TO REVEAL OR PUBLISH IN WHOLE OR PART

APPLE COMPUTER INC.

SIZE	DRAWING NUMBER	REV.
D	051-6949	09
SCALE NONE	SHT 54 OF 111	

www.teknisi-indonesia.com

UNUSED PINS HAVE THE FORMAT
SMC_XXX WHERE XXX IS THE PORT NUMBER.
THEY ARE SET BY SOFTWARE TO BE
DRIVEN OUTPUTS ALWAYS SO THEY
CAN BE LEFT NO-CONNECTED.

OMIT
U5800
SMC_H8S2116
BGA
(1 OF 4)

PM_LAN_ENABLE	B12	P10	P60/KIN0*	L13	SMC_PM_G2_EN
SMC_RSTGATE_L	C13	P11	P61/KIN1*	L14	SMC_ADAPTER_EN
ALL_SYS_PWRGD	A15	P12	P62/KIN2*	L15	SPI_ARB
RSMRST_PWRGD	B14	P13	P63/KIN3*	K12	SPI_SCLK
SMC_SB_NMI	B15	P14	P64/KIN4*	K13	SPI_SI
PM_RSMRST_L	C14	P15	P65/KIN5*	K14	SPI_SO
IMVP_VR_ON	D12	P16	P66/IRQ6*/KIN6*	J12	SMC_PROCHOT_3_3_L
PM_PWRBTN_L	C15	P17	P67/IRQ7*/KIN7*	J13	SMC_CPU_INIT_3_3_L
SMC_P20	D13	P20	P70/AN0	N12	SMC_CPU_ISENSE
SMC_P21	D14	P21	P71/AN1	R13	SMC_CPU_VSENSE
SMC_P22	D15	P22	P72/AN2	P13	SMC_GPU_ISENSE
SMC_P23	E12	P23	P73/AN3	R14	SMC_GPU_VSENSE
SMC_BATT_TRICKLE_EN_L	E14	P24	P74/AN4	P14	SMC_DCIN_ISENSE
SMC_BATT_CHG_EN	E15	P25	P75/AN5	R15	SMC_PBUS_VSENSE
SMC_P26	E13	P26	P76/AN6	N13	SMC_BATT_ISENSE
SMC_P27	F14	P27	P77/AN7	P15	SMC_FWIRE_ISENSE
LPC_AD<0>	D9	P30/LAD0	P80/PME*	C7	SMC_WAKE_SCI_L
LPC_AD<1>	C9	P31/LAD1	P81/GA20	A7	SMC_TPM_GPIO
LPC_AD<2>	A9	P32/LAD2	P82/CLKRUN*	B7	PM_CLKRUN_L
LPC_AD<3>	B9	P33/LAD3	P83/LPCPD*	D6	PM_SUS_STAT_L
LPC_FRAME_L	D8	P34/LFRAME*	P84/IRQ3*/TXD1	C6	SC_TX_L
SMC_LRESET_L	C8	P35/LRESET*	P85/IRQ4*/RXD1	A6	SC_RX_L
PCI_CLK_SMC	A8	P36/LCLK	P86/IRQ5*/SCK1/SCL1	B6	SMB_BSB_CLK
INT_SERIRQ	D7	P37/SERIRQ	P90/IRQ2*	K4	SMC_ONOFF_L
SMC_XDP_TMS_L	A5	P40/TMI0	P91/IRQ1*	J2	SMC_BC_ACOK
SMC_XDP_TDI_L	B5	P41/TMO0	P92/IRQ0*	J1	SMC_BS_ALRT_L
SMB_BSB_DATA	D5	P42/SDA1	P93/IRQ12*	J3	PM_SLP_S3_L
SMC_TPM_PP	C3	P43/TMI1/EXSCK1	P94/IRQ13*	J4	PM_SLP_S4_L
SMC_XDP_TRST_L	B1	P44/TMO1	P95/IRQ14*	H2	PM_SLP_S5_L
SMC_XDP_TCK	C2	P45	P96/EXCL	H1	SMC_SUS_CLK
SMC_SYS_LED	D3	P46/PWX0/PWM0	P97/IRQ15*/SDA0	G2	SMC_SMB_0_DATA
SMC_SYS_KBDLED	C1	P47/PWX1/PWM1			
SMC_TX_L	G1	P50			
SMC_RX_L	G4	P51			
SMC_SMB_0_CLK	F2	P52/SCL0			

OMIT
U5800
SMC_H8S2116
BGA
(2 OF 4)

SMC_RCIN_L	R3	PA0/KIN8*/PA2DC	PE0	M3	SMC_CASE_OPEN
BOOT_LPC_SPI_L	P3	PA1/KIN9*/PA2DD	PE1*/ETCK	M2	SMC_TCK
PM_SYSRST_L	R2	PA2/KIN10*/PS2AC	PE2*/ETDI	M1	SMC_TDI
SMC_TPM_RESET_L	N3	PA3/KIN11*/PS2AD	PE3*/ETDO	L4	SMC_TDO
PM_EXTTS_L<0>	R1	PA4/KIN12*/PS2BC	PE4*/ETMS	L2	SMC_TMS
PM_THRM_L	N2	PA5/KIN13*/PS2BD	PF0/IRQ8*/PWM2	M7	SMC_PF0
SYS_ONEWIRE	M4	PA6/KIN14*/PS2CC	PF1/IRQ9*/PWM3	P6	SMC_PF1
PM_BATLOW_L	N1	PA7/KIN15*/PS2CD	PF2/IRQ10*/TMOY	R6	SMC_LID
SMC_EXTSMI_L	B10	PB0/LSMI*	PF3/IRQ11*/TMOX	N6	SMC_CPU_RESET_3_3_L
SMC_RUNTIME_SCI_L	A10	PB1/LSCI	PF4/PWM4	M6	SMC_BATT_ISET
SMC_ODD_DETECT	D10	PB2	PF5/PWM5	R5	SMC_BATT_VSET
ISENSE_CAL_EN	A11	PB3	PF6/PWM6	P5	SMC_SYS_ISET
SMC_EXCARD_CP	B11	PB4	PF7/PWM7	N5	SMC_SYS_VSET
SMC_EXCARD_PWR_EN	C11	PB5	PG0/EXIRQ8*/TMIX	P9	SPI_CE_L
SMC_EXCARD_PWR_OC_L	A12	PB6	PG1/EXIRQ9*/TMIY	R9	SMC_XDP_TCK_3_3
SMC_XDP_TDO_3_3_L	D11	PB7	PG2/EXIRQ10*/SDA2	N9	SMB_BSA_DATA
SMC_FAN_0_CTL	G14	PC0/TIOCA0/WUE8*	PG3/EXIRQ11*/SCL2	P8	SMB_BSA_CLK
SMC_FAN_1_CTL	G15	PC1/TIOCB0/WUE9*	PG4/EXIRQ12*/EXSDAA	R8	SMB_A_S3_DATA
SMC_FAN_2_CTL	G13	PC2/TIOCC0/TCLKA/WUE10*	PG5/EXIRQ13*/EXSCLA	M8	SMB_A_S3_CLK
SMC_FAN_3_CTL	G12	PC3/TIOCD0/TCLKB/WUE11*	PG6/EXIRQ14*/EXSDAB	P7	SMB_B_S0_DATA
SMC_FAN_0_TACH	H14	PC4/TIOCA1/WUE12*	PG7/EXIRQ15*/EXSCLB	R7	SMB_B_S0_CLK
SMC_FAN_1_TACH	H15	PC5/TIOCB1/TCLKC/WUE13*	PH0/EXIRQ6*	E1	SMC_PROCHOT
SMC_FAN_2_TACH	H13	PC6/TIOCA2/WUE14*	PH1/EXIRQ7*	F3	SMC_THRMTRIP
SMC_FAN_3_TACH	H12	PC7/TIOCB2/TCLKD/WUE15*	PH2/FWE	K2	SMC_FWE
SMS_X_AXIS	M11	PD0/AN8	PH3/EXEXCL	C4	ALS_GAIN
SMS_Y_AXIS	P11	PD1/AN9	PH4	D4	SMS_INT_L
SMS_Z_AXIS	R11	PD2/AN10	PH5	B3	SMS_ONOFF_L
SMC_ANALOG_ID	N11	PD3/AN11			
SMC_NB_ISENSE	P10	PD4/AN12			
SMC_MEM_ISENSE	R10	PD5/AN13			
ALS_LEFT	N10	PD6/AN14			
ALS_RIGHT	M10	PD7/AN15			

OMIT
U5800
SMC_H8S2116
BGA
(4 OF 4)

G3	NC0	NC12	E15
H3	NC1	NC13	A14
K3	NC2	NC14	C12
L3	NC3	NC15	C10
N4	NC4	NC16	C5
M5	NC5	NC17	A3
N7	NC6	NC18	B8
M12	NC7	NC19	E4
M13	NC8	NC20	H4
L12	NC9	NC21	M9
K15	NC10	NC22	N8
J14	NC11		

=PP3V3_S5_SMC

C5802 22UF 20% 6.3V X5R 805
C5803 0.1UF 20% 10V CERM 402
C5804 0.1UF 20% 10V CERM 402
C5805 0.1UF 20% 10V CERM 402
C5806 0.1UF 20% 10V CERM 402

LAYOUT NOTE:
PLACE C5807 NEAR PIN F1

SMC_VCL
VCL IS INTERNAL RAIL
C5807 0.47UF 20% 6.3V CERM-X5R 402

LAYOUT NOTE:
PLACE R5899 AND C5820 NEAR SMC PIN N14,N15

=PP3V3_S5_SMC
R5899 4.7 5% 1/10W MF-LF 402
PP3V3_AVCC_SMC
MIN_LINE_WIDTH=0.25 MM
MIN_NECK_WIDTH=0.20 MM
C5820 0.1UF 20% 10V CERM 402
GND_SMC_AVSS

PP3V3_AVREF_SMC
=PP3V3_S5_SMC

OMIT
U5800
SMC_H8S2116
BGA
(3 OF 4)

SMC_RST_L	E3	RES*	
SMC_XTAL	A2	XTAL	
SMC_EXTAL	B2	EXTAL	
		MD1	E2
		MD2	K1
		NMI	F4
		ETRST*	L1
		AVSS	P12, R12

AVCC: N14, N15; VCC: P2, P1, J15, A1, F1; VCL: M14, M15; AVREF: AVREF; VSS: D1, F4, R4, F12, F13, B13, A13, A4, B4, D2

R5809 10K 5% 1/16W MF-LF 402
R5801 10K 5% 1/16W MF-LF 402
KBC_MDE
SMC_MD1
SMC_NMI
SMC_TRST_L
NOSTUFF
R5898 10K 5% 1/16W MF-LF 402
R5803 0 5% 1/16W MF-LF 402
R5802 10K 5% 1/16W MF-LF 402

XW5800
SM
GND_SMC_AVSS

SMC
SYNC_MASTER=N/A SYNC_DATE=N/A

NOTICE OF PROPRIETARY PROPERTY
THE INFORMATION CONTAINED HEREIN IS THE PROPRIETARY PROPERTY OF APPLE COMPUTER, INC. THE POSSESSOR AGREES TO THE FOLLOWING
I TO MAINTAIN THE DOCUMENT IN CONFIDENCE
II NOT TO REPRODUCE OR COPY IT
III NOT TO REVEAL OR PUBLISH IN WHOLE OR PART

APPLE COMPUTER INC.
SIZE D | DRAWING NUMBER 051-6949 | REV. 09
SCALE NONE | SHT 58 OF 111

www.teknisi-indonesia.com

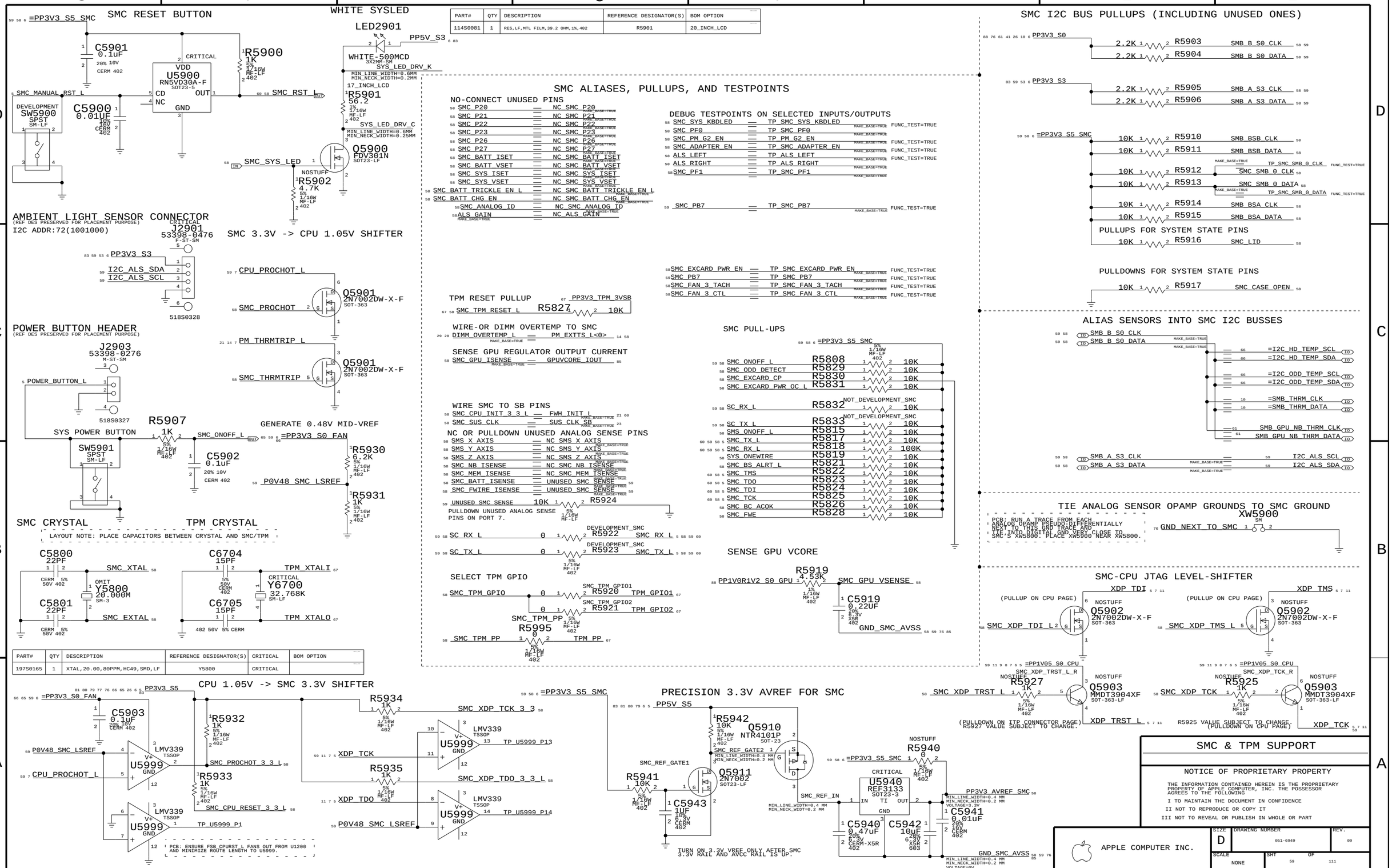

PART#	QTY	DESCRIPTION	REFERENCE DESIGNATOR(S)	BOM OPTION
114S0081	1	RES,LF,MTL FILM,39.2 OHM,1%,402	R5901	20_INCH_LCD

PART#	QTY	DESCRIPTION	REFERENCE DESIGNATOR(S)	CRITICAL	BOM OPTION
197S0165	1	XTAL,20.00,80PPM,HC49,SMD,LF	Y5800	CRITICAL	

www.teknisi-indonesia.com

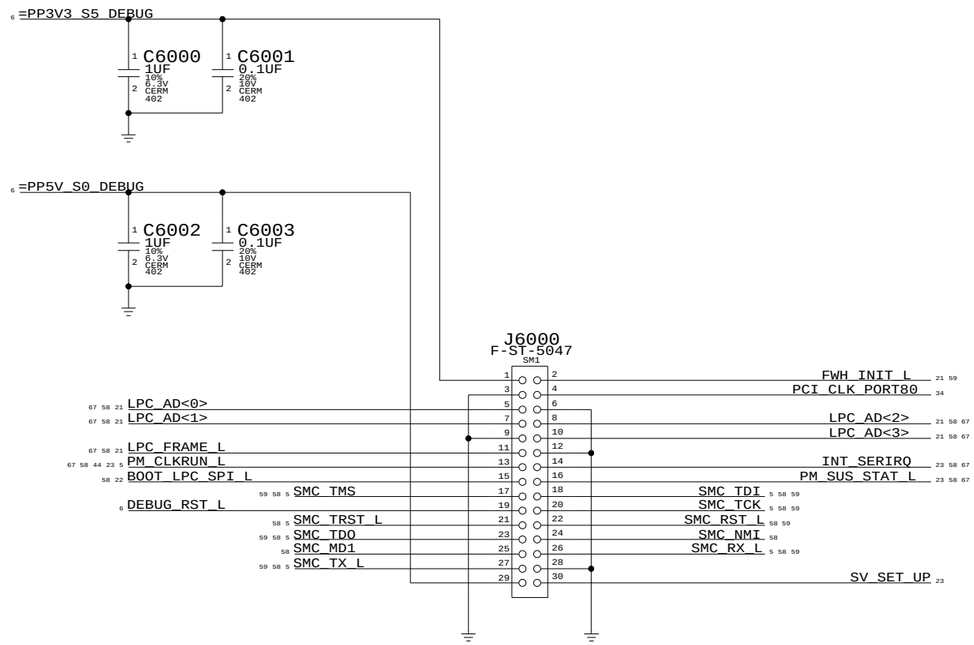

LPC+ CONN

SYNC_MASTER=N/A SYNC_DATE=N/A

NOTICE OF PROPRIETARY PROPERTY

THE INFORMATION CONTAINED HEREIN IS THE PROPRIETARY PROPERTY OF APPLE COMPUTER, INC. THE POSSESSOR AGREES TO THE FOLLOWING

I TO MAINTAIN THE DOCUMENT IN CONFIDENCE

II NOT TO REPRODUCE OR COPY IT

III NOT TO REVEAL OR PUBLISH IN WHOLE OR PART

APPLE COMPUTER INC.

SIZE	DRAWING NUMBER	REV.
D	051-6949	09
SCALE NONE	SHT 60 OF 111	

www.teknisi-indonesia.com

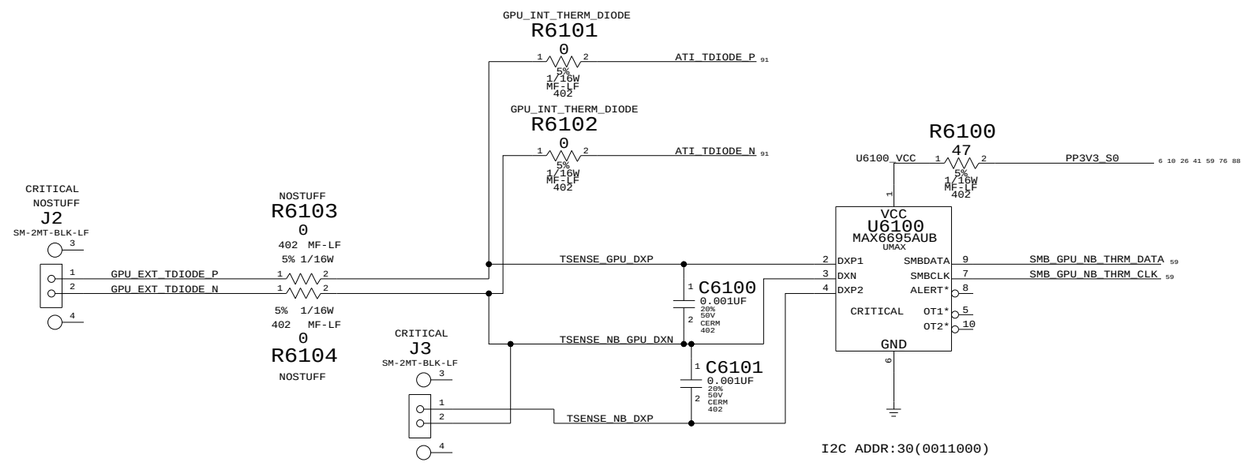

GPU+NB THERMAL

SYNC_MASTER=N/A SYNC_DATE=N/A

NOTICE OF PROPRIETARY PROPERTY

THE INFORMATION CONTAINED HEREIN IS THE PROPRIETARY PROPERTY OF APPLE COMPUTER, INC. THE POSSESSOR AGREES TO THE FOLLOWING

I TO MAINTAIN THE DOCUMENT IN CONFIDENCE
II NOT TO REPRODUCE OR COPY IT
III NOT TO REVEAL OR PUBLISH IN WHOLE OR PART

APPLE COMPUTER INC.

SIZE	DRAWING NUMBER	REV.
D	051-6949	09

SCALE NONE SHT 61 OF 111

www.teknisi-indonesia.com

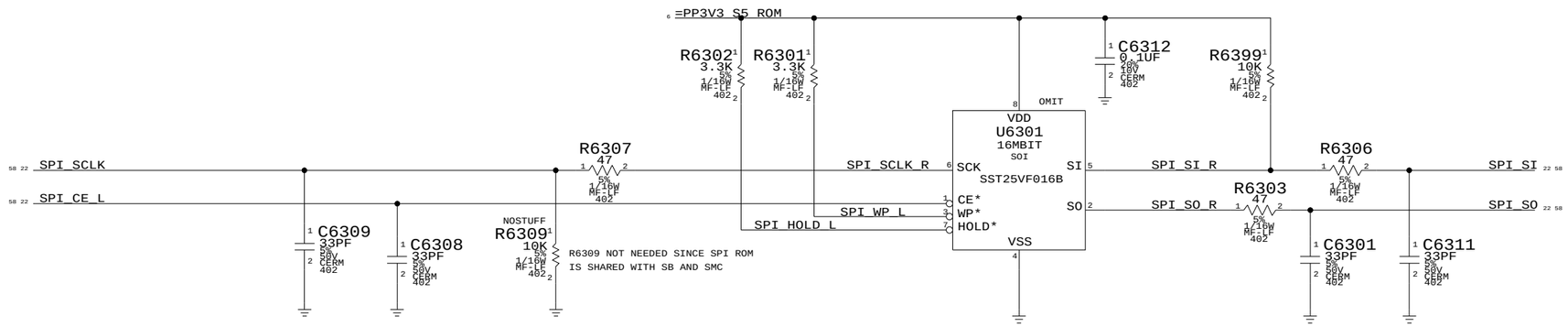

R6306-07 SHOULD BE PLACED LESS THAN 2.54MM FROM U2100

R6303 SHOULD BE PLACED LESS THAN 2.54MM FROM U6301

SPI BOOTROM

SYNC_MASTER=MASTER SYNC_DATE=5/23/05

NOTICE OF PROPRIETARY PROPERTY

THE INFORMATION CONTAINED HEREIN IS THE PROPRIETARY PROPERTY OF APPLE COMPUTER, INC. THE POSSESSOR AGREES TO THE FOLLOWING

I TO MAINTAIN THE DOCUMENT IN CONFIDENCE

II NOT TO REPRODUCE OR COPY IT

III NOT TO REVEAL OR PUBLISH IN WHOLE OR PART

APPLE COMPUTER INC.

SIZE	DRAWING NUMBER	REV.
D	051-6949	09
SCALE NONE	SHT 63 OF 111	

www.teknisi-indonesia.com

FAN 0

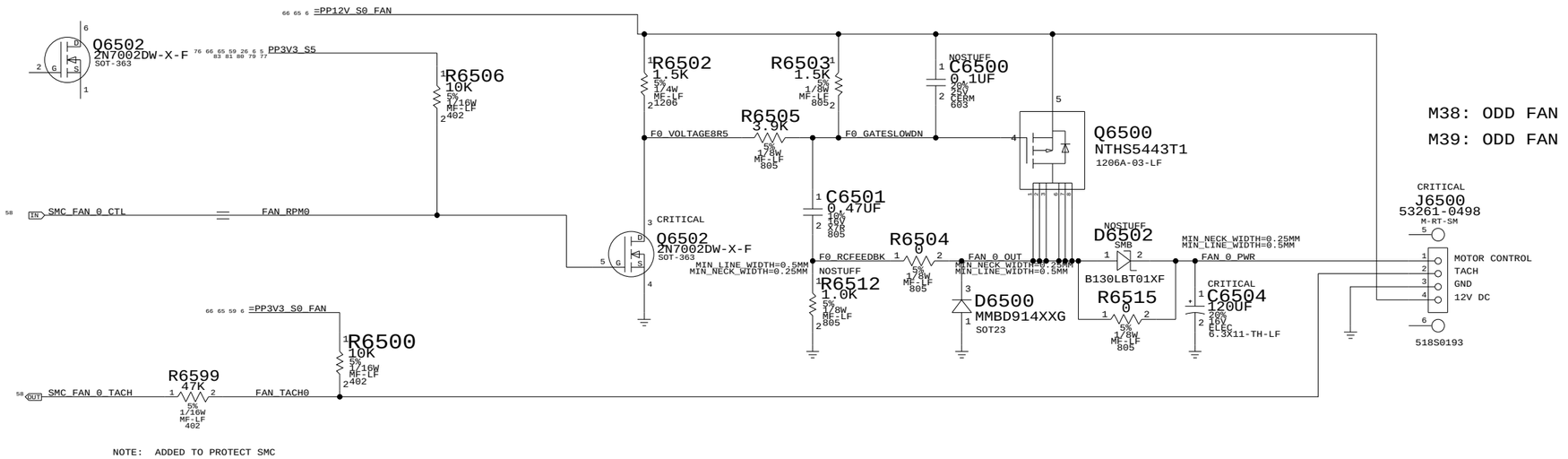

NOTE: ADDED TO PROTECT SMC

FAN 1

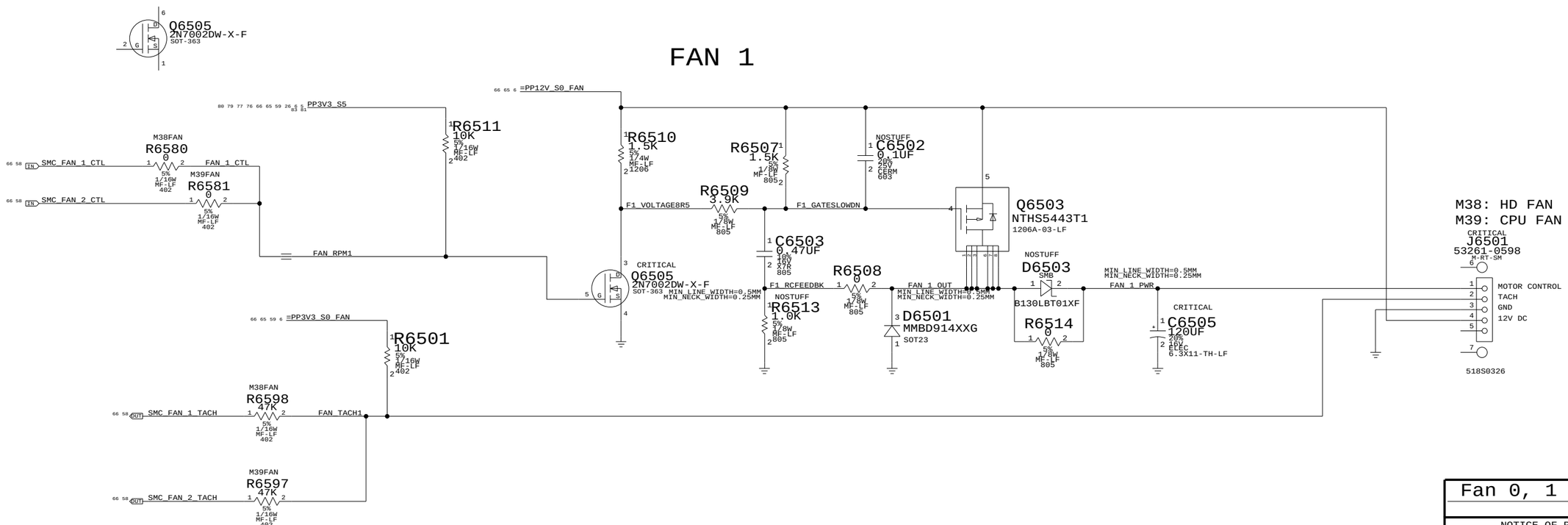

Fan 0, 1 & System Temp

NOTICE OF PROPRIETARY PROPERTY

THE INFORMATION CONTAINED HEREIN IS THE PROPRIETARY PROPERTY OF APPLE COMPUTER, INC. THE POSSESSOR AGREES TO THE FOLLOWING

I TO MAINTAIN THE DOCUMENT IN CONFIDENCE

II NOT TO REPRODUCE OR COPY IT

III NOT TO REVEAL OR PUBLISH IN WHOLE OR PART

APPLE COMPUTER INC.

SIZE	DRAWING NUMBER	REV.
D	051-6949	09
SCALE NONE	SHT 65 OF 111	

www.teknisi-indonesia.com

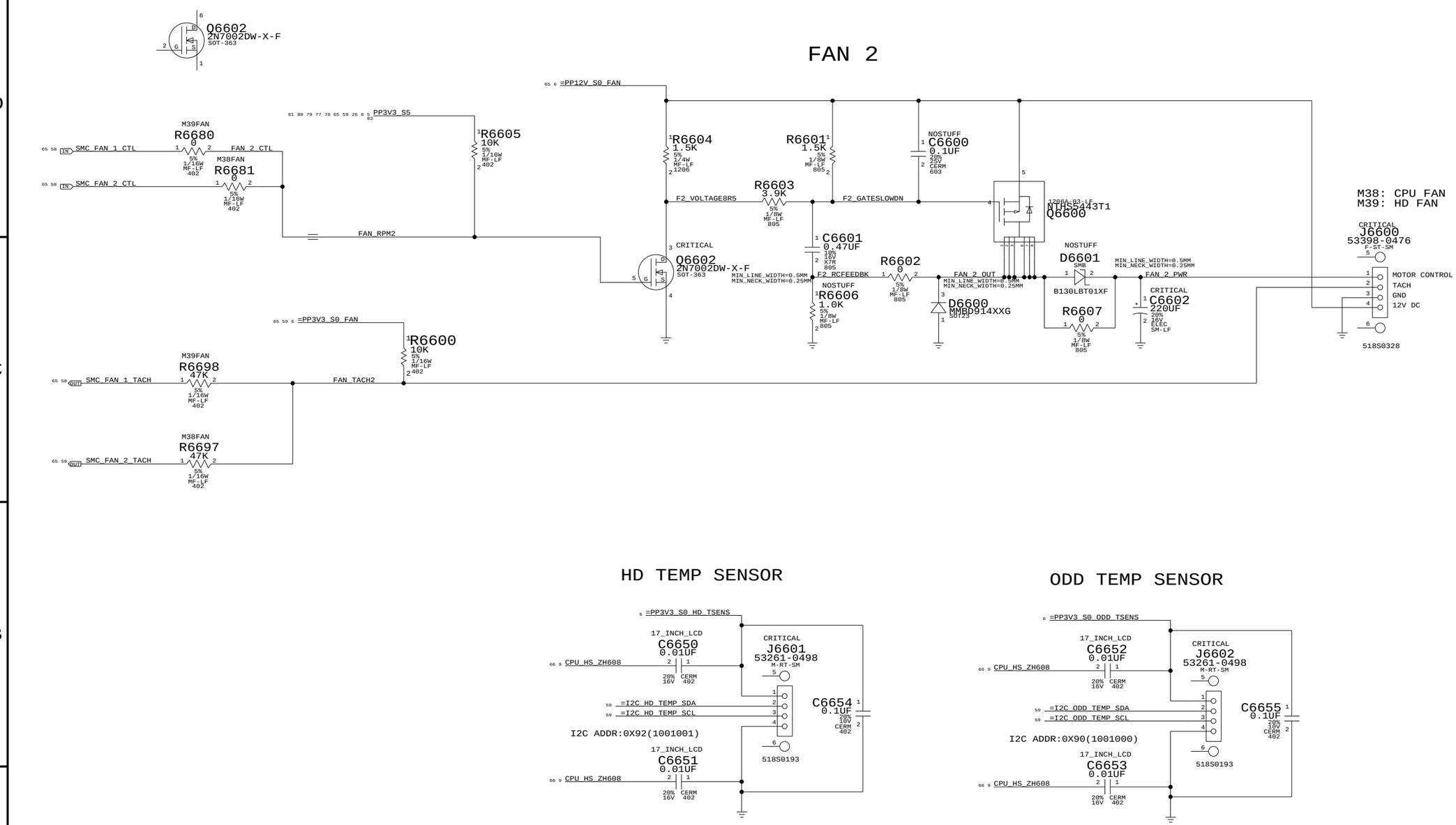

HD TEMP SENSOR

ODD TEMP SENSOR

Fan 2 & HD Temp

NOTICE OF PROPRIETARY PROPERTY

THE INFORMATION CONTAINED HEREIN IS THE PROPRIETARY PROPERTY OF APPLE COMPUTER, INC. THE POSSESSOR AGREES TO THE FOLLOWING

I TO MAINTAIN THE DOCUMENT IN CONFIDENCE

II NOT TO REPRODUCE OR COPY IT

III NOT TO REVEAL OR PUBLISH IN WHOLE OR PART

APPLE COMPUTER INC.

SIZE	DRAWING NUMBER	REV.
D	051-6949	09
SCALE NONE	SHT 66 OF 111	

www.teknisi-indonesia.com

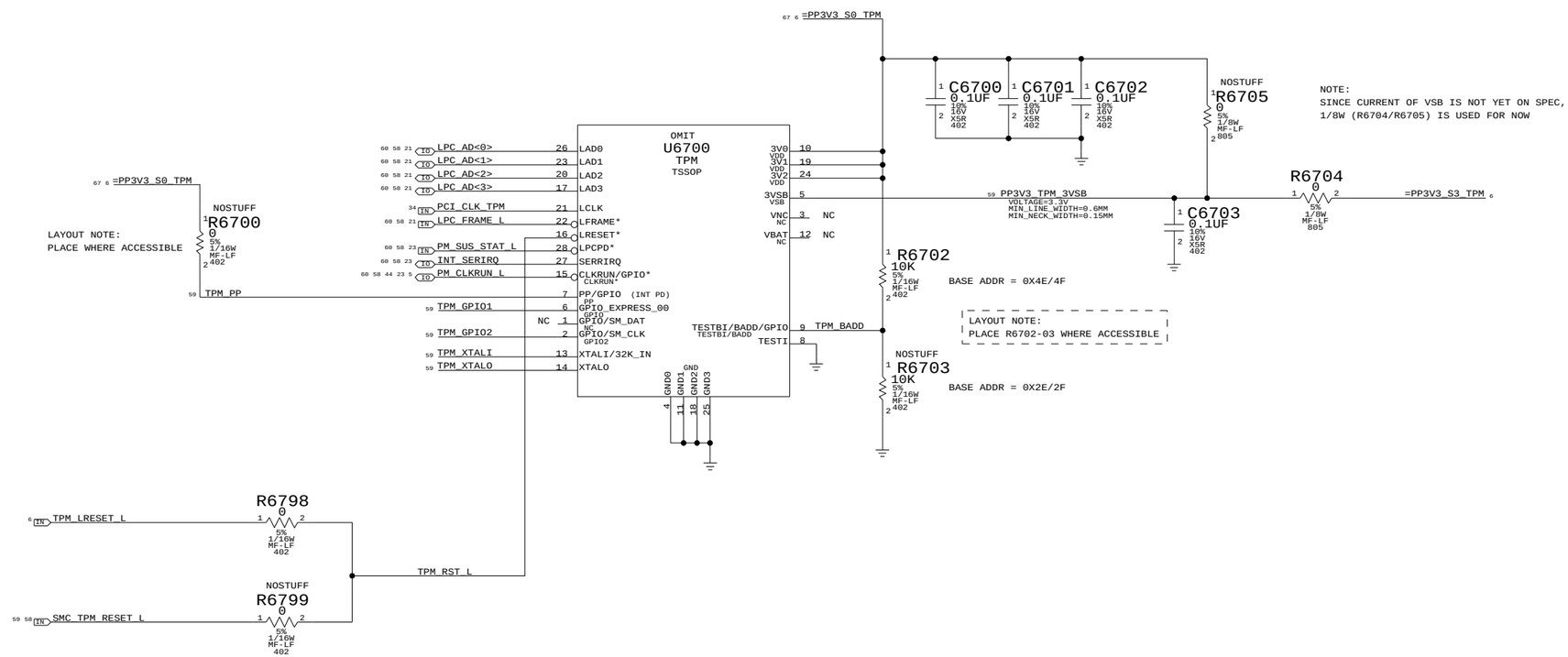

TPM

SYNC_MASTER=N/A SYNC_DATE=N/A

NOTICE OF PROPRIETARY PROPERTY

THE INFORMATION CONTAINED HEREIN IS THE PROPRIETARY PROPERTY OF APPLE COMPUTER, INC. THE POSSESSOR AGREES TO THE FOLLOWING

I TO MAINTAIN THE DOCUMENT IN CONFIDENCE

II NOT TO REPRODUCE OR COPY IT

III NOT TO REVEAL OR PUBLISH IN WHOLE OR PART

APPLE COMPUTER INC.

SIZE	DRAWING NUMBER	REV.
D	051-6949	09

SCALE NONE SHT 67 OF 111

www.teknisi-indonesia.com

AUDIO CODEC
APPLE P/N 353S1345

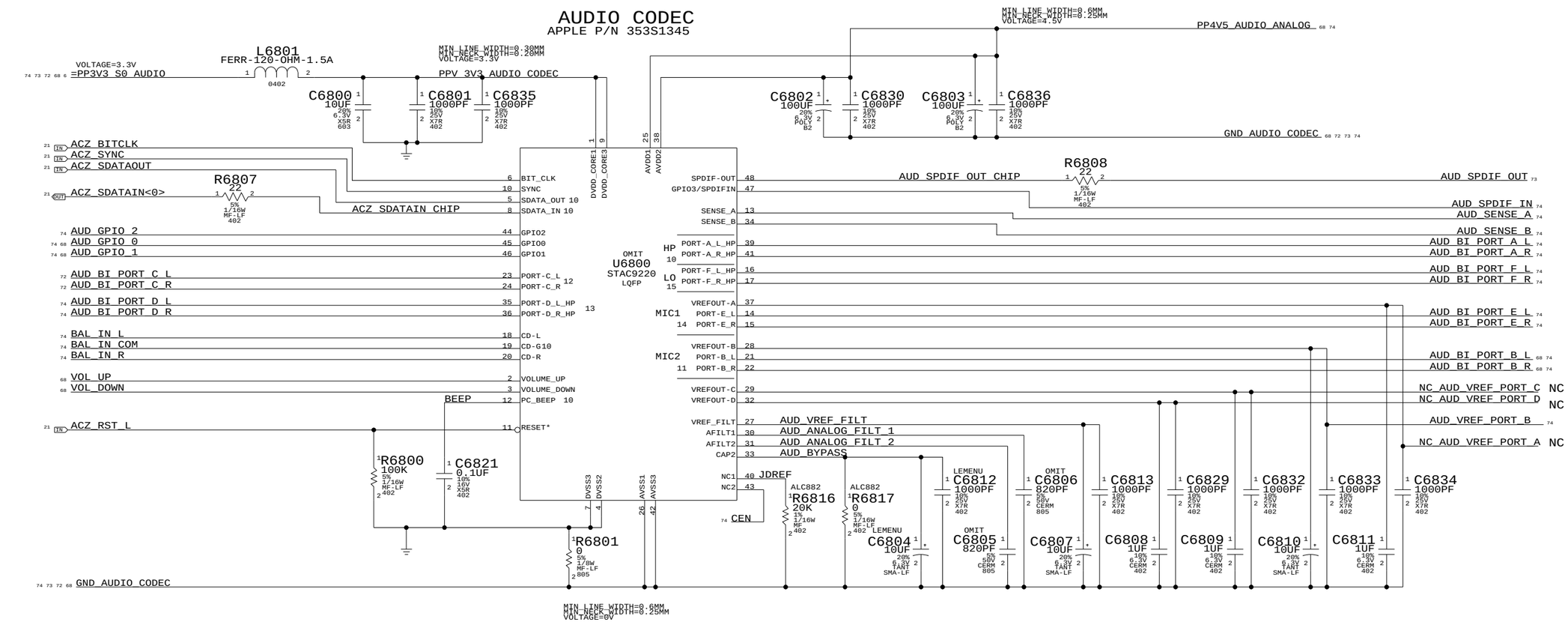

MIC INPUT TO BOTH L&R

4.5V POWER SUPPLY FOR CODEC AND LINE IN AMP
APN: 353S1233

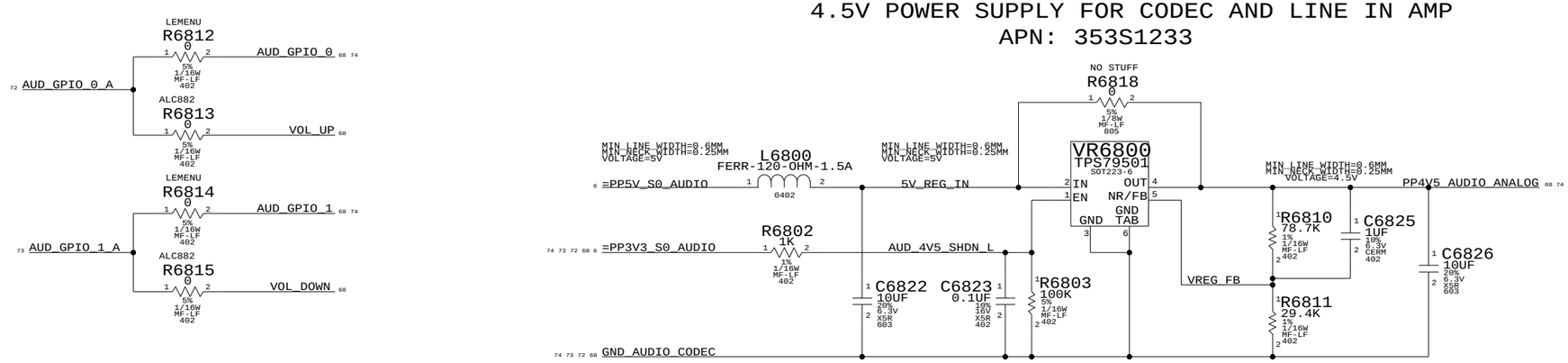

AUDIO: CODEC	
SYNC_MASTER=FINO-SO	SYNC_DATE=04/28/2005

NOTICE OF PROPRIETARY PROPERTY

THE INFORMATION CONTAINED HEREIN IS THE PROPRIETARY PROPERTY OF APPLE COMPUTER, INC. THE POSSESSOR AGREES TO THE FOLLOWING

I TO MAINTAIN THE DOCUMENT IN CONFIDENCE

II NOT TO REPRODUCE OR COPY IT

III NOT TO REVEAL OR PUBLISH IN WHOLE OR PART

APPLE COMPUTER INC.

SIZE	DRAWING NUMBER	REV.
D	051-6790	??
SCALE NONE	SHT 68	OF 154

www.teknisi-indonesia.com

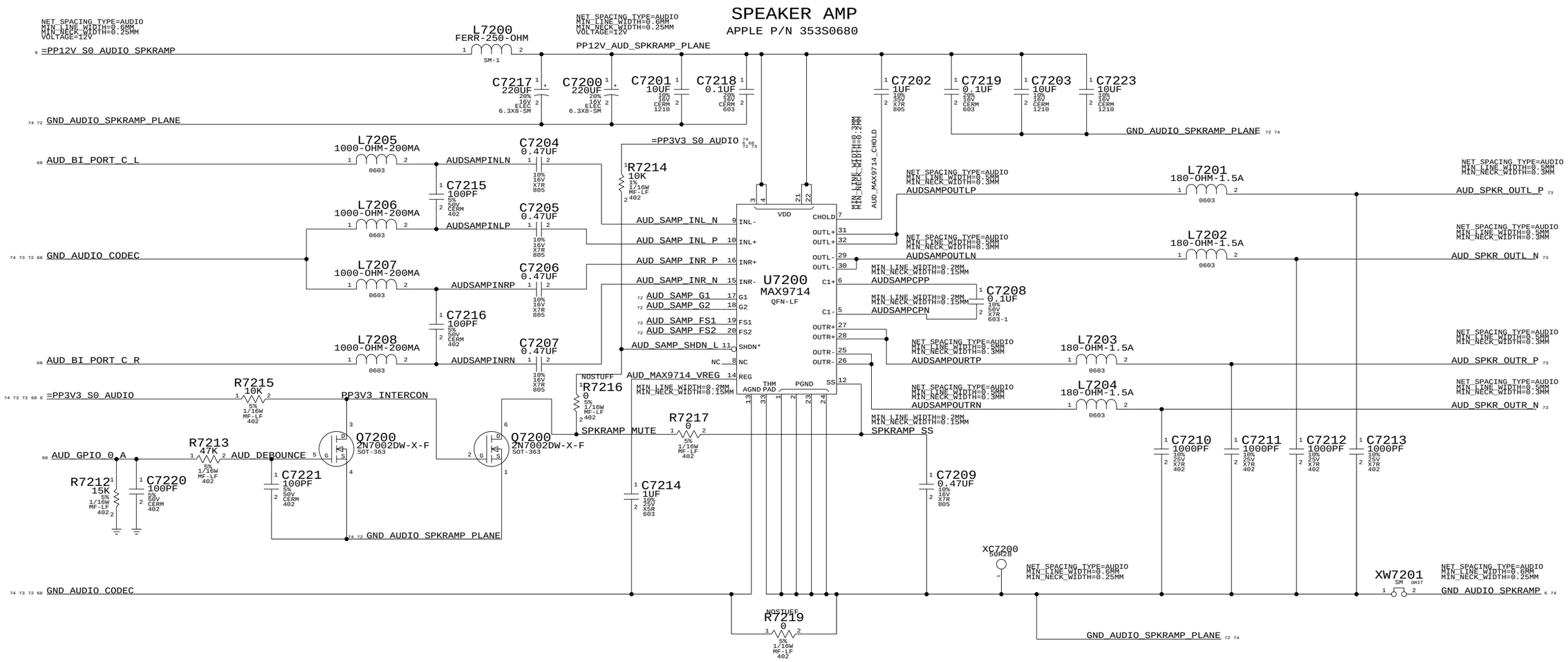

AUDIO: SPEAKER AMP

SYNC_MASTER=FINO-SO SYNC_DATE=04/28/2005

NOTICE OF PROPRIETARY PROPERTY

THE INFORMATION CONTAINED HEREIN IS THE PROPRIETARY PROPERTY OF APPLE COMPUTER, INC. THE POSSESSOR AGREES TO THE FOLLOWING

I TO MAINTAIN THE DOCUMENT IN CONFIDENCE

II NOT TO REPRODUCE OR COPY IT

III NOT TO REVEAL OR PUBLISH IN WHOLE OR PART

APPLE COMPUTER INC.

SIZE	DRAWING NUMBER	REV.
D	051-6790	??
SCALE NONE	SHT 72 OF 154	

www.teknisi-indonesia.com

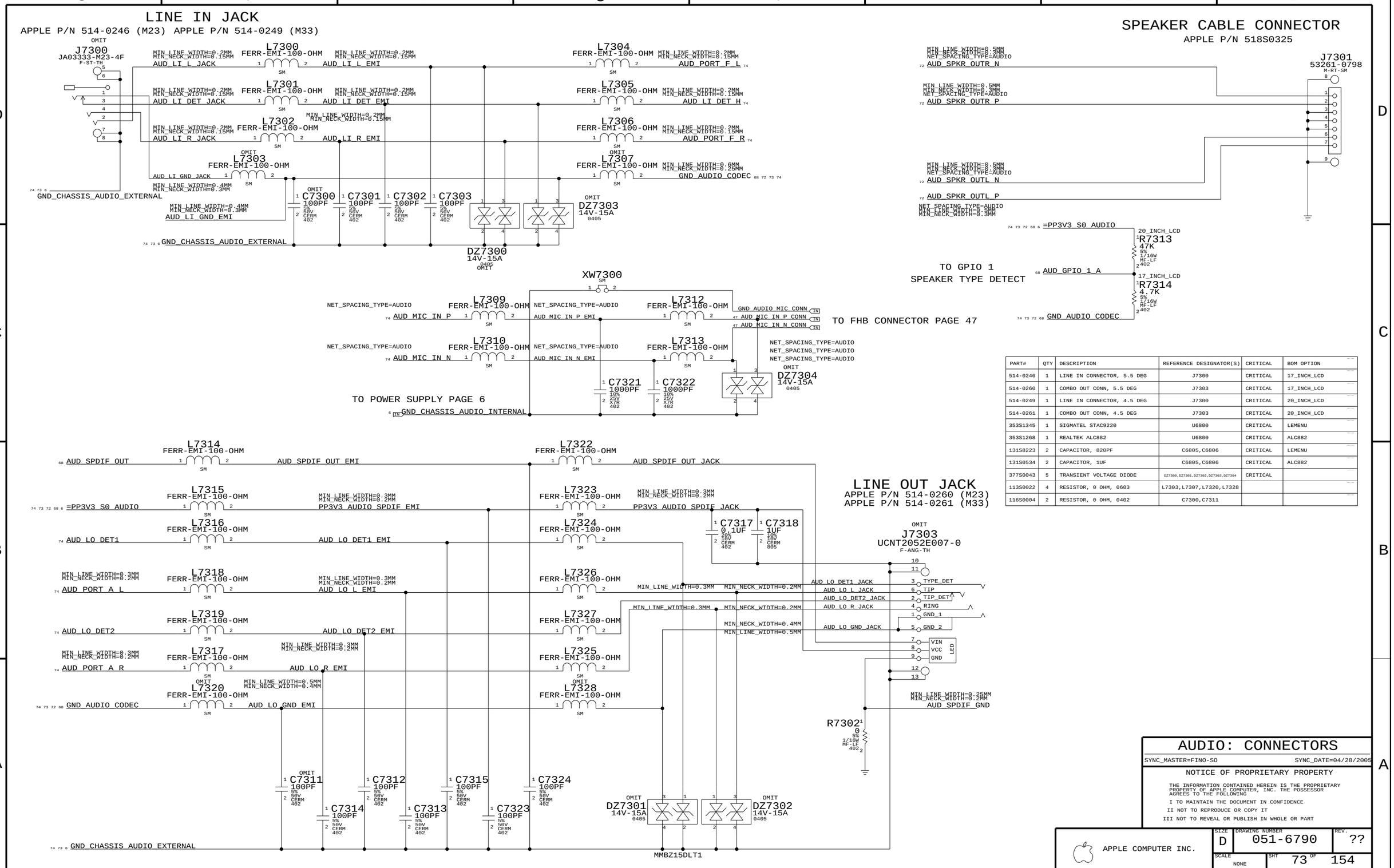

PART#	QTY	DESCRIPTION	REFERENCE DESIGNATOR(S)	CRITICAL	BOM OPTION
514-0246	1	LINE IN CONNECTOR, 5.5 DEG	J7300	CRITICAL	17_INCH_LCD
514-0260	1	COMBO OUT CONN, 5.5 DEG	J7303	CRITICAL	17_INCH_LCD
514-0249	1	LINE IN CONNECTOR, 4.5 DEG	J7300	CRITICAL	20_INCH_LCD
514-0261	1	COMBO OUT CONN, 4.5 DEG	J7303	CRITICAL	20_INCH_LCD
353S1345	1	SIGMATEL STAC9220	U6800	CRITICAL	LEMENU
353S1268	1	REALTEK ALC882	U6800	CRITICAL	ALC882
131S8223	2	CAPACITOR, 820PF	C6805,C6806	CRITICAL	LEMENU
131S0534	2	CAPACITOR, 1UF	C6805,C6806	CRITICAL	ALC882
377S0043	5	TRANSIENT VOLTAGE DIODE	DZ7300,DZ7301,DZ7302,DZ7303,DZ7304	CRITICAL	
113S0022	4	RESISTOR, 0 OHM, 0603	L7303,L7307,L7320,L7328		
116S0004	2	RESISTOR, 0 OHM, 0402	C7300,C7311		

AUDIO: CONNECTORS

SYNC_MASTER=FINO-SO SYNC_DATE=04/28/2005

NOTICE OF PROPRIETARY PROPERTY

THE INFORMATION CONTAINED HEREIN IS THE PROPRIETARY PROPERTY OF APPLE COMPUTER, INC. THE POSSESSOR AGREES TO THE FOLLOWING

I TO MAINTAIN THE DOCUMENT IN CONFIDENCE

II NOT TO REPRODUCE OR COPY IT

III NOT TO REVEAL OR PUBLISH IN WHOLE OR PART

APPLE COMPUTER INC.

SIZE	DRAWING NUMBER	REV.
D	051-6790	??
SCALE NONE	SHT 73 OF 154	

www.teknisi-indonesia.com

JACK SENSE PULL UPS(PLACE NEXT TO CODEC)

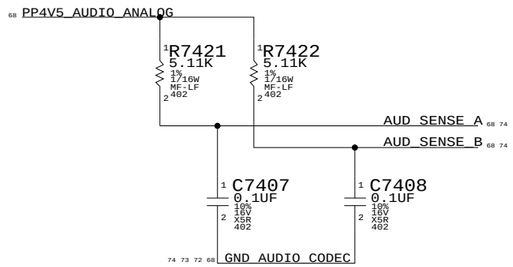

USED PORTS
PORT A HP/LI
PORT B MIC IN
PORT C BI SPEAKERS
PORT F LI/LO

UNUSED PORTS
PORT E
PORT D

PORT F LI/LO

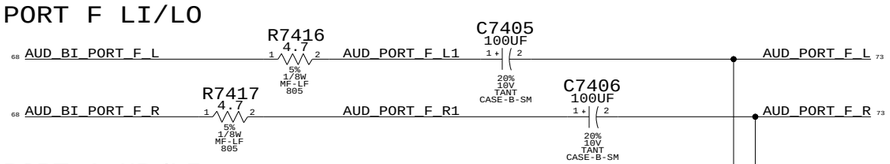

PORT A HP/LI

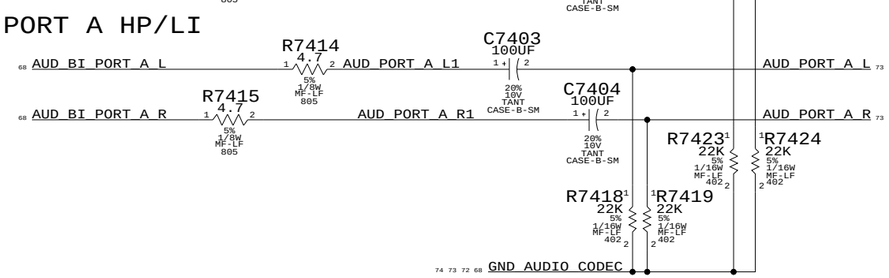

UNUSED PORT TERMINATION

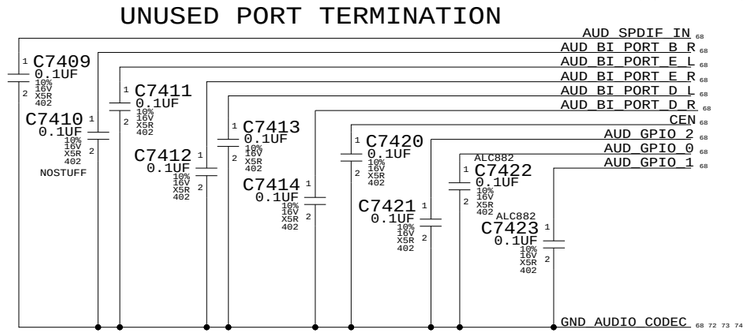

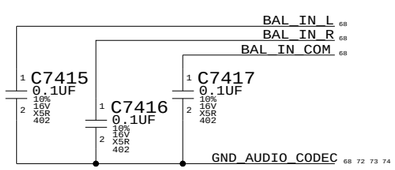

PORT F (LI/LO) PLUG DETECT

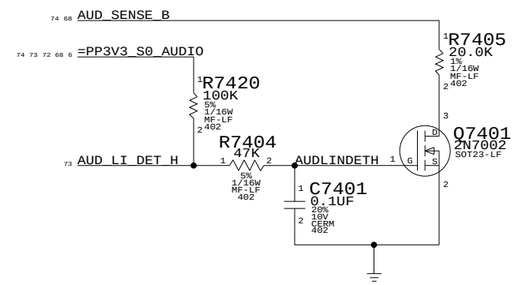

AUDIO GROUND RETURNS

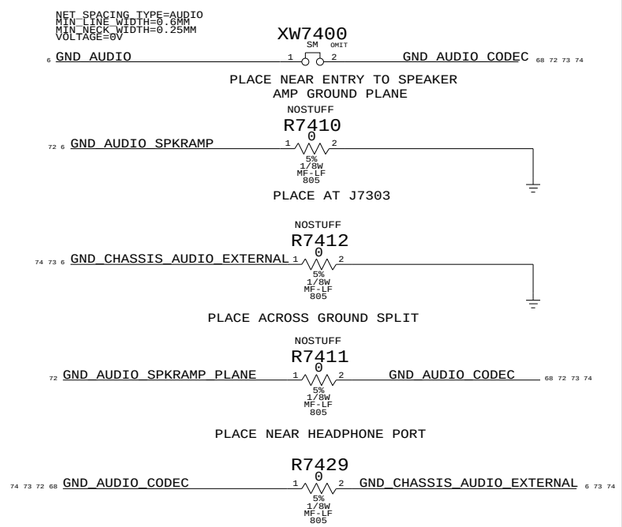

PORT A/H (HP/LI/DIG_OUT) PLUG DETECT (E TELLS H TO COME ON)

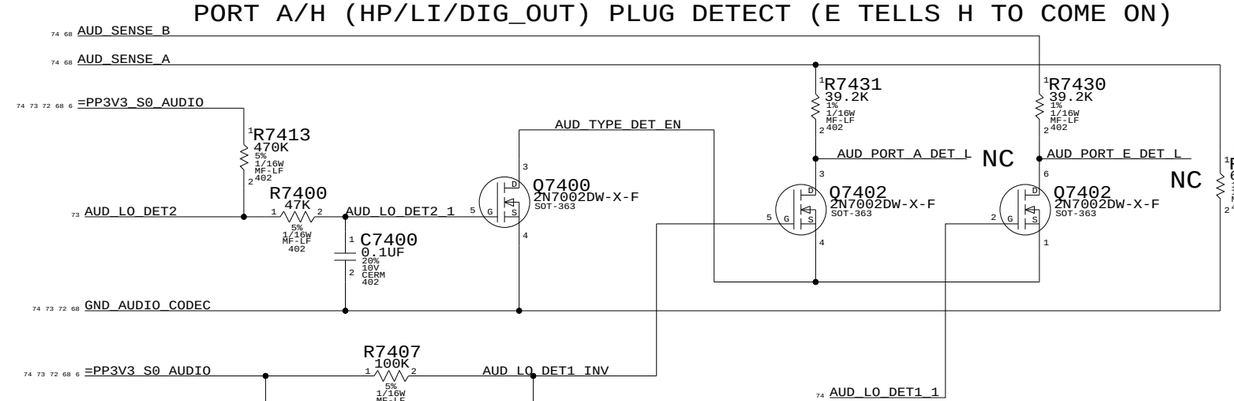

R7432 ENABLES PORT B AND C

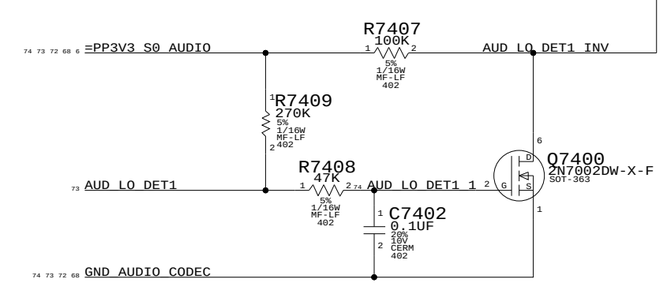

MICROPHONE IMPEDANCE MATCHING CIRCUIT

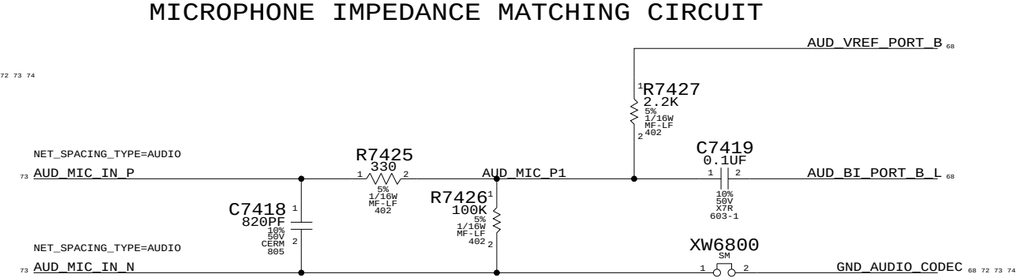

AUDIO: POWER SUPPLIES

SYNC_MASTER=FINO-SO SYNC_DATE=04/28/2005

NOTICE OF PROPRIETARY PROPERTY

THE INFORMATION CONTAINED HEREIN IS THE PROPRIETARY PROPERTY OF APPLE COMPUTER, INC. THE POSSESSOR AGREES TO THE FOLLOWING

I TO MAINTAIN THE DOCUMENT IN CONFIDENCE
II NOT TO REPRODUCE OR COPY IT
III NOT TO REVEAL OR PUBLISH IN WHOLE OR PART

APPLE COMPUTER INC.

SIZE	DRAWING NUMBER	REV.
D	051-6790	??
SCALE NONE	SHT 74 OF 154	

www.teknisi-indonesia.com

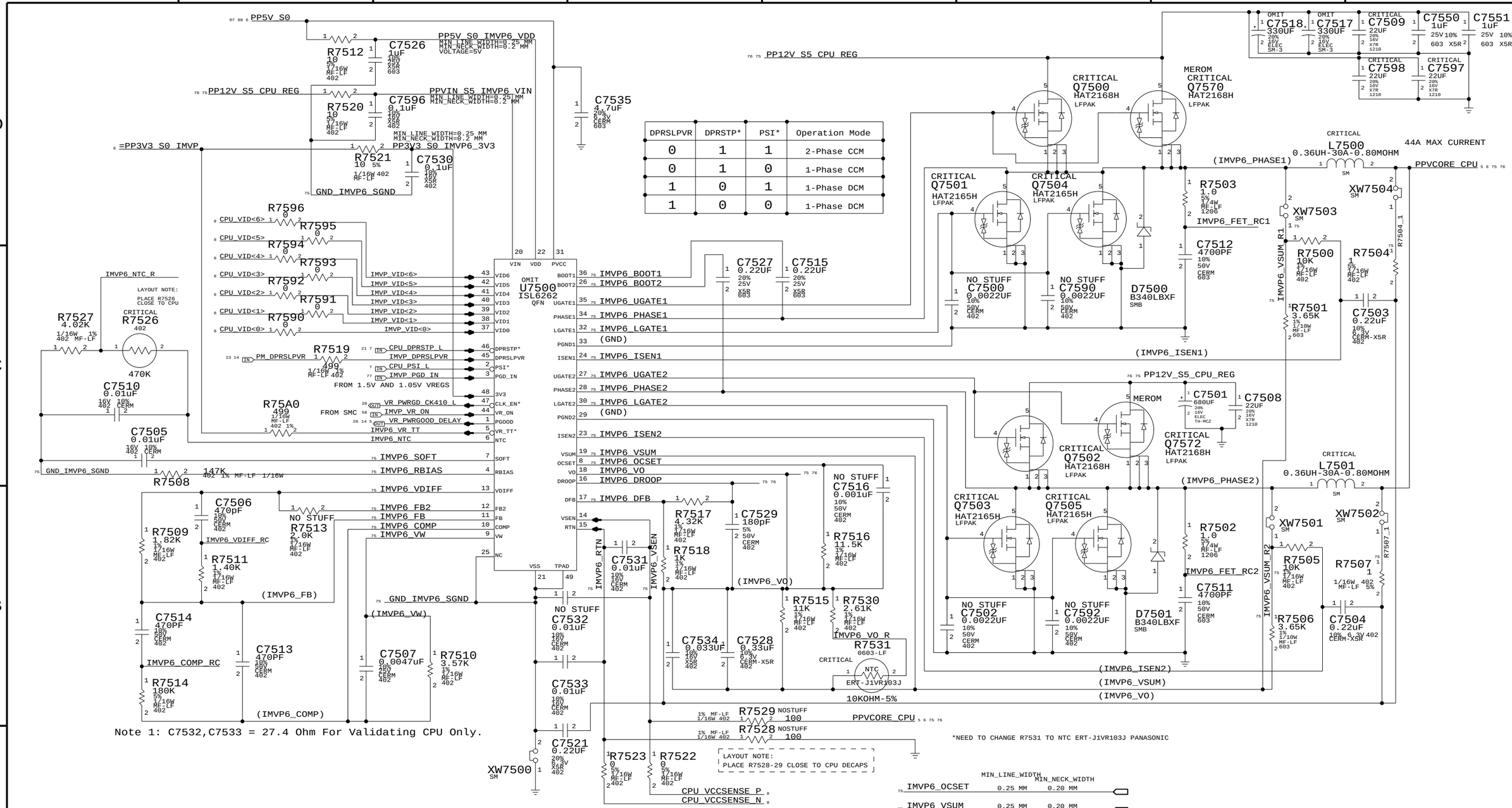

DPRSLPVR	DPRSTP*	PSI*	Operation Mode
0	1	1	2-Phase CCM
0	1	0	1-Phase CCM
1	0	1	1-Phase DCM
1	0	0	1-Phase DCM

Note 1: C7532,C7533 = 27.4 Ohm For Validating CPU Only.

*NEED TO CHANGE R7531 TO NTC ERT-J1VR103J PANASONIC

IMVP6 CPU VCORE REGULATOR

	MIN_LINE_WIDTH	MIN_NECK_WIDTH
IMVP6_PHASE1	1.5 MM	0.25 MM
IMVP6_BOOT1	0.25 MM	0.25 MM
IMVP6_UGATE1	1.5 MM	0.25 MM
IMVP6_LGATE1	1.5 MM	0.25 MM
IMVP6_ISEN1	0.25 MM	0.25 MM
IMVP6_FET_RC1	0.25 MM	0.25 MM
IMVP6_VSUM_R1	0.25 MM	0.25 MM
R7504_1	0.25 MM	0.25 MM

	MIN_LINE_WIDTH	MIN_NECK_WIDTH
IMVP6_PHASE2	0.25 MM	0.25 MM
IMVP6_BOOT2	0.25 MM	0.25 MM
IMVP6_UGATE2	0.25 MM	0.25 MM
IMVP6_LGATE2	0.25 MM	0.25 MM
IMVP6_ISEN2	0.25 MM	0.25 MM
IMVP6_FET_RC2	0.25 MM	0.25 MM
IMVP6_VSUM_R2	0.60 MM	0.25 MM
R7507_1	0.25 MM	0.25 MM

	MIN_LINE_WIDTH	MIN_NECK_WIDTH
IMVP6_OCSET	0.25 MM	0.20 MM
IMVP6_VSUM	0.25 MM	0.20 MM
GND_IMVP6_SGND	0.50 MM	0.20 MM
IMVP6_VO	0.25 MM	0.20 MM
IMVP6_DROOP	0.25 MM	0.20 MM
IMVP6_DFB	0.25 MM	0.20 MM
IMVP6_SOFT	0.25 MM	0.20 MM
IMVP6_RBIAS	0.25 MM	0.20 MM
IMVP6_VDIFF	0.25 MM	0.20 MM
IMVP6_FB2	0.25 MM	0.20 MM
IMVP6_FB	0.25 MM	0.20 MM
IMVP6_COMP	0.25 MM	0.20 MM
IMVP6_VW	0.25 MM	0.25 MM
IMVP6_RTN	0.25 MM	0.25 MM
IMVP6_VSEN	0.25 MM	0.25 MM

IMVP6 CPU VCore Regulator

SYNC_MASTER=POWER SYNC_DATE=07/08/2005

NOTICE OF PROPRIETARY PROPERTY

THE INFORMATION CONTAINED HEREIN IS THE PROPRIETARY PROPERTY OF APPLE COMPUTER, INC. THE POSSESSOR AGREES TO THE FOLLOWING

I TO MAINTAIN THE DOCUMENT IN CONFIDENCE

II NOT TO REPRODUCE OR COPY IT

III NOT TO REVEAL OR PUBLISH IN WHOLE OR PART

APPLE COMPUTER INC.

SIZE	DRAWING NUMBER	REV.
D	051-6949	09

SCALE NONE SHT 75 OF 111

www.teknisi-indonesia.com

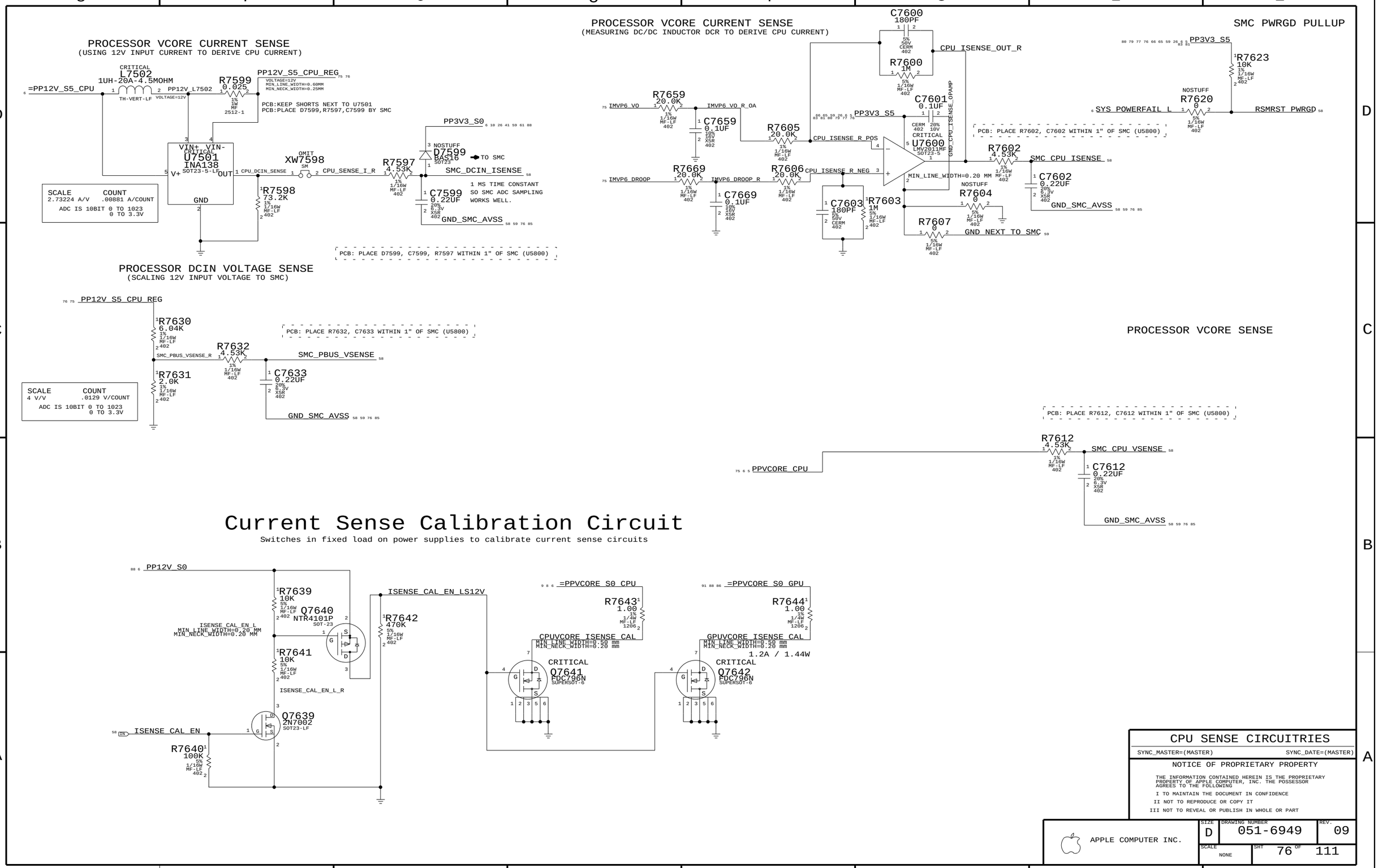

www.teknisi-indonesia.com

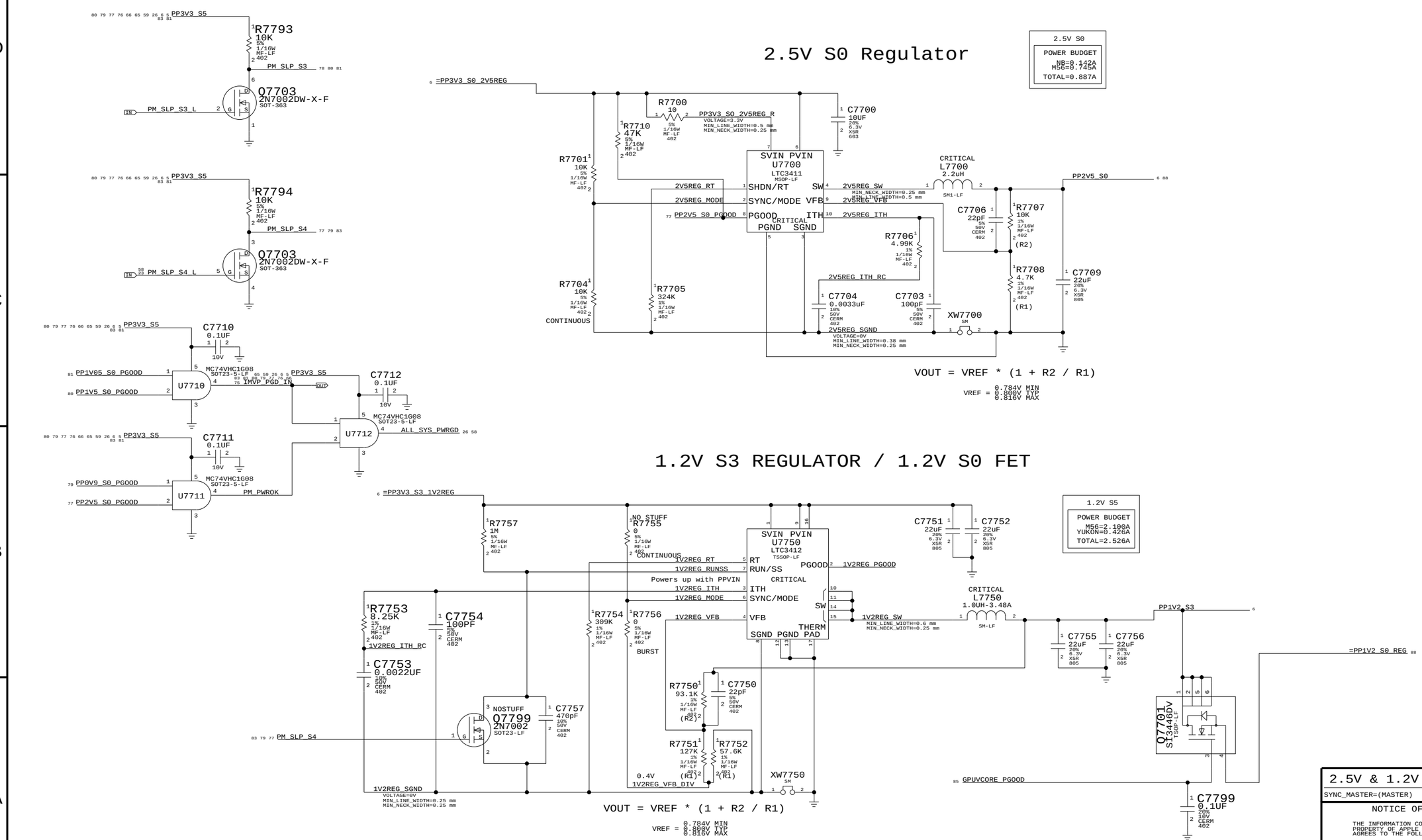

2.5V & 1.2V GRAPHICS REGULATORS

SYNC_MASTER=(MASTER) SYNC_DATE=(MASTER)

NOTICE OF PROPRIETARY PROPERTY

THE INFORMATION CONTAINED HEREIN IS THE PROPRIETARY PROPERTY OF APPLE COMPUTER, INC. THE POSSESSOR AGREES TO THE FOLLOWING

I TO MAINTAIN THE DOCUMENT IN CONFIDENCE

II NOT TO REPRODUCE OR COPY IT

III NOT TO REVEAL OR PUBLISH IN WHOLE OR PART

APPLE COMPUTER INC.

SIZE	DRAWING NUMBER	REV.
D	051-6949	09

SCALE NONE SHT 77 OF 111

www.teknisi-indonesia.com

1.8V S0 REGULATOR

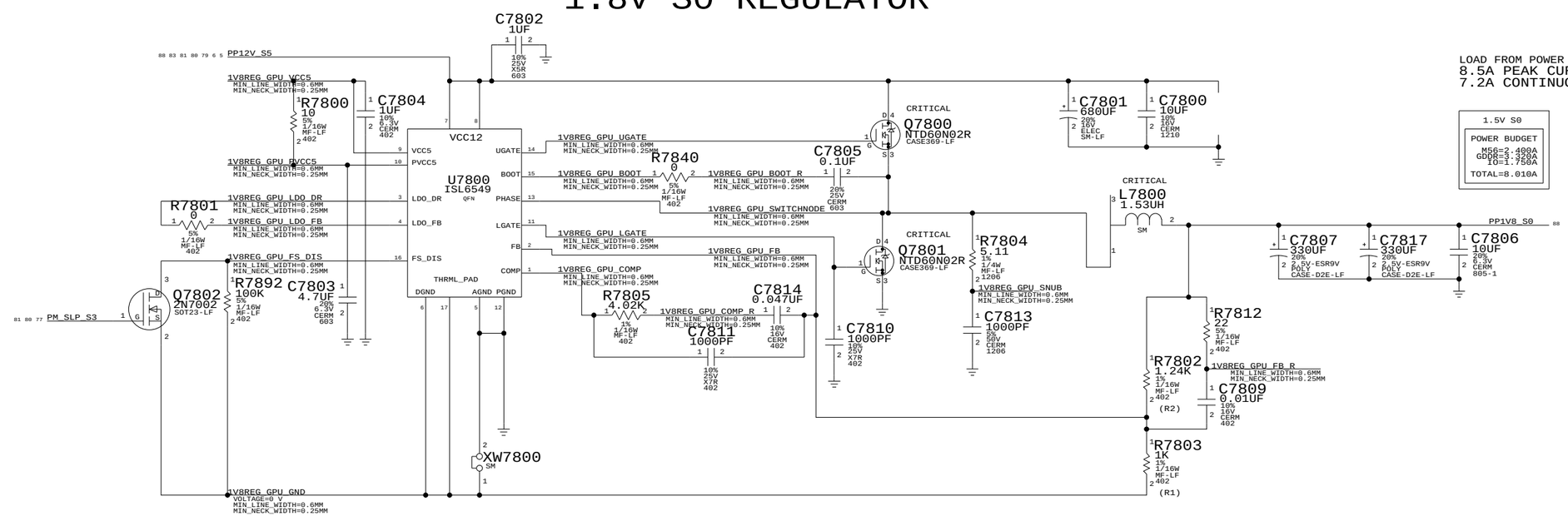

LOAD FROM POWER BUDGET
8.5A PEAK CURRENT DRAW
7.2A CONTINUOUS CURRENT DRAW

1.5V S0
POWER BUDGET
M56=2.400A
GDDR=3.960A
IO=1.750A
TOTAL=8.010A

VOUT=VREF*(1+R2/R1)

VREF = 0.784V MIN
0.800V TYP
0.816V MAX

1.8V GDDR REGULATOR

SYNC_MASTER=(MASTER) SYNC_DATE=(MASTER)

NOTICE OF PROPRIETARY PROPERTY

THE INFORMATION CONTAINED HEREIN IS THE PROPRIETARY PROPERTY OF APPLE COMPUTER, INC. THE POSSESSOR AGREES TO THE FOLLOWING

I TO MAINTAIN THE DOCUMENT IN CONFIDENCE

II NOT TO REPRODUCE OR COPY IT

III NOT TO REVEAL OR PUBLISH IN WHOLE OR PART

APPLE COMPUTER INC.

SIZE	DRAWING NUMBER	REV.
D	051-6949	09
SCALE NONE	SHT 78 OF 111	

www.teknisi-indonesia.com

1.8V S3 REGULATOR

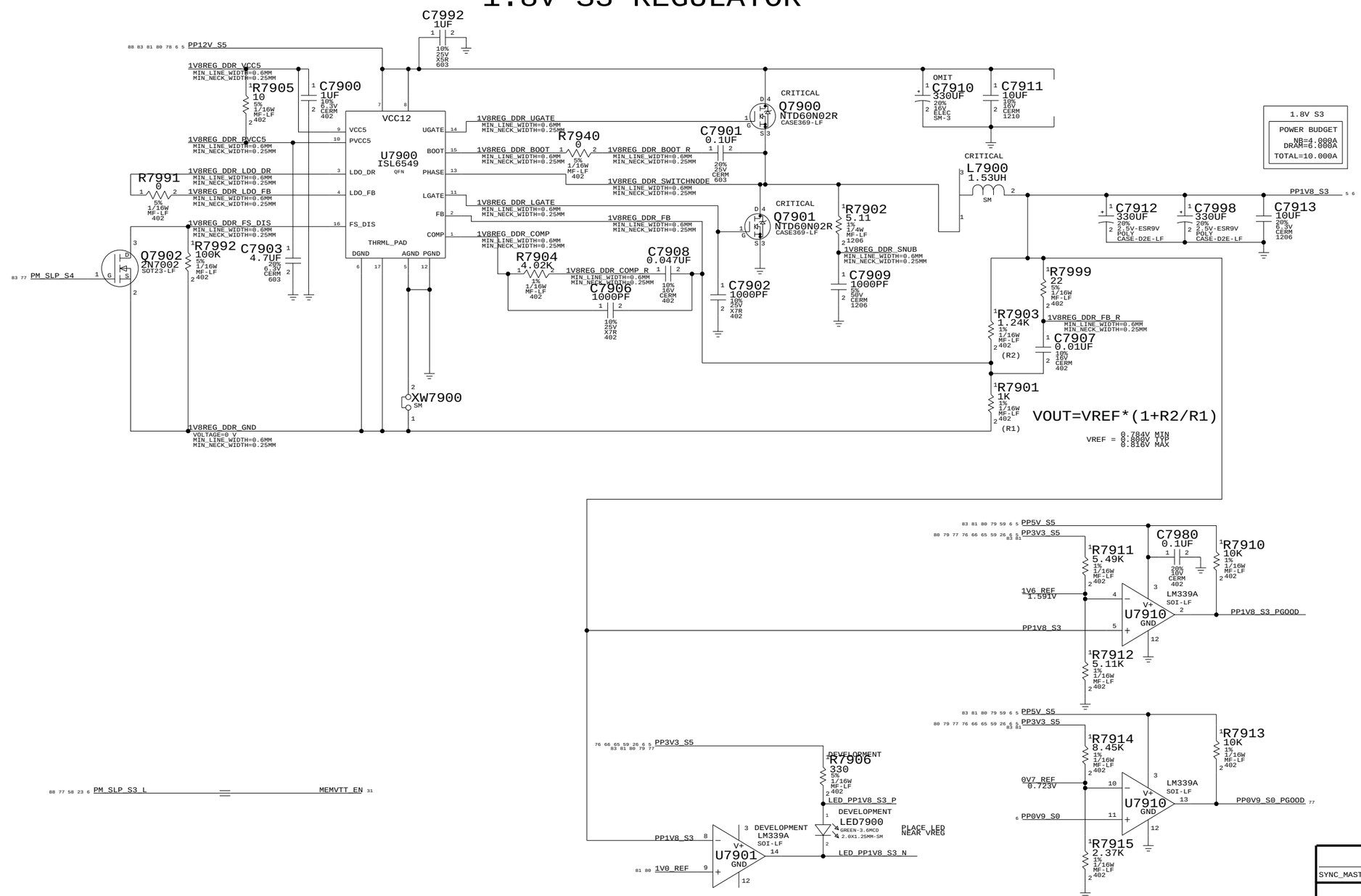

1.8V Vreg

SYNC_MASTER=M23-PC SYNC_DATE=04/12/2005

NOTICE OF PROPRIETARY PROPERTY

THE INFORMATION CONTAINED HEREIN IS THE PROPRIETARY PROPERTY OF APPLE COMPUTER, INC. THE POSSESSOR AGREES TO THE FOLLOWING

I TO MAINTAIN THE DOCUMENT IN CONFIDENCE

II NOT TO REPRODUCE OR COPY IT

III NOT TO REVEAL OR PUBLISH IN WHOLE OR PART

APPLE COMPUTER INC.

SIZE	DRAWING NUMBER	REV.
D	051-6949	09
SCALE NONE	SHT 79 OF 111	

www.teknisi-indonesia.com

1.5V S0 REGULATOR

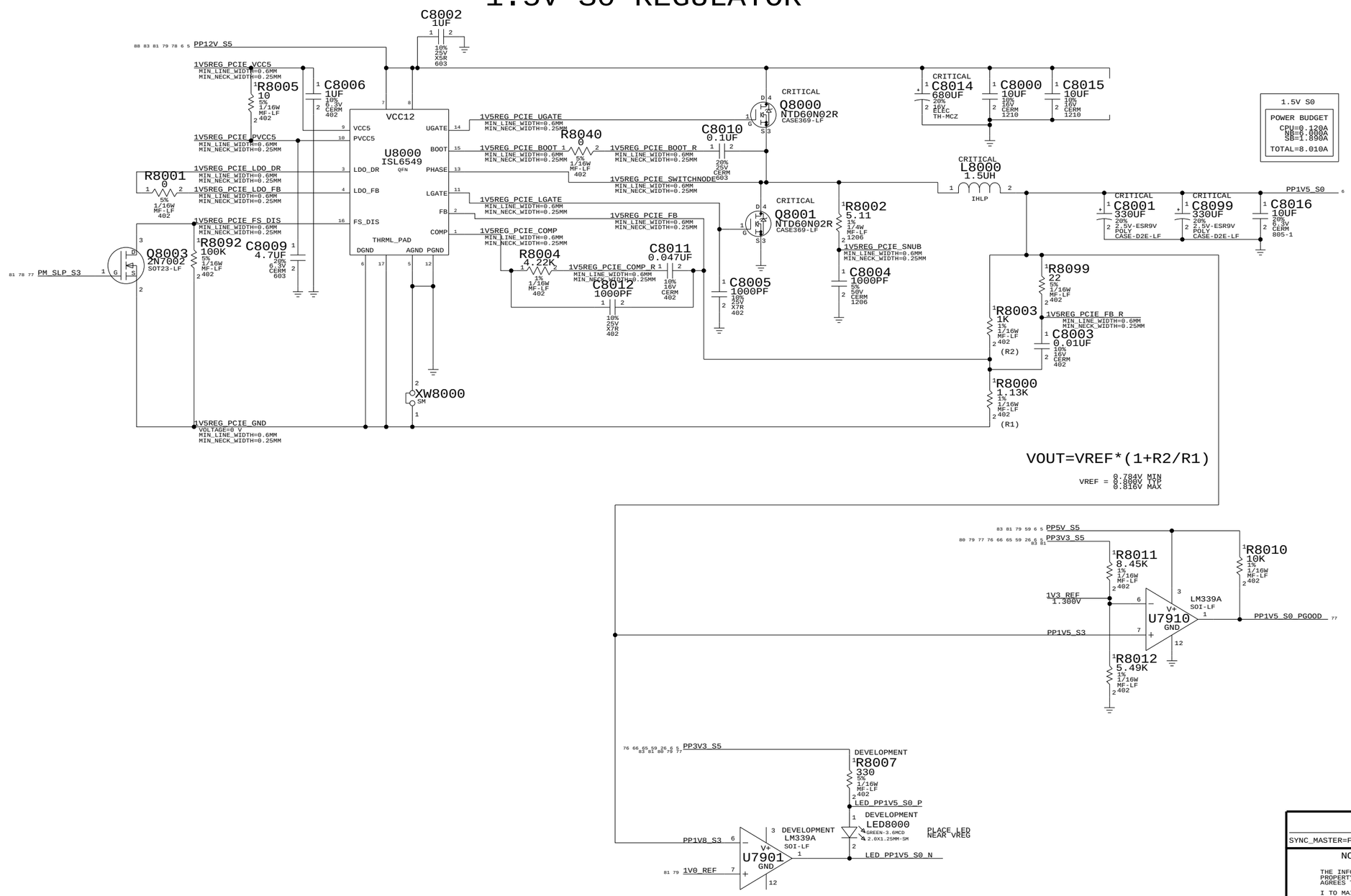

1.5V Vreg

SYNC_MASTER=FINO-PC SYNC_DATE=05/18/2005

NOTICE OF PROPRIETARY PROPERTY

THE INFORMATION CONTAINED HEREIN IS THE PROPRIETARY PROPERTY OF APPLE COMPUTER, INC. THE POSSESSOR AGREES TO THE FOLLOWING

I TO MAINTAIN THE DOCUMENT IN CONFIDENCE

II NOT TO REPRODUCE OR COPY IT

III NOT TO REVEAL OR PUBLISH IN WHOLE OR PART

APPLE COMPUTER INC.

SIZE	DRAWING NUMBER	REV.
D	051-6950	06

SCALE NONE

www.teknisi-indonesia.com

1.05V S0 REGULATOR

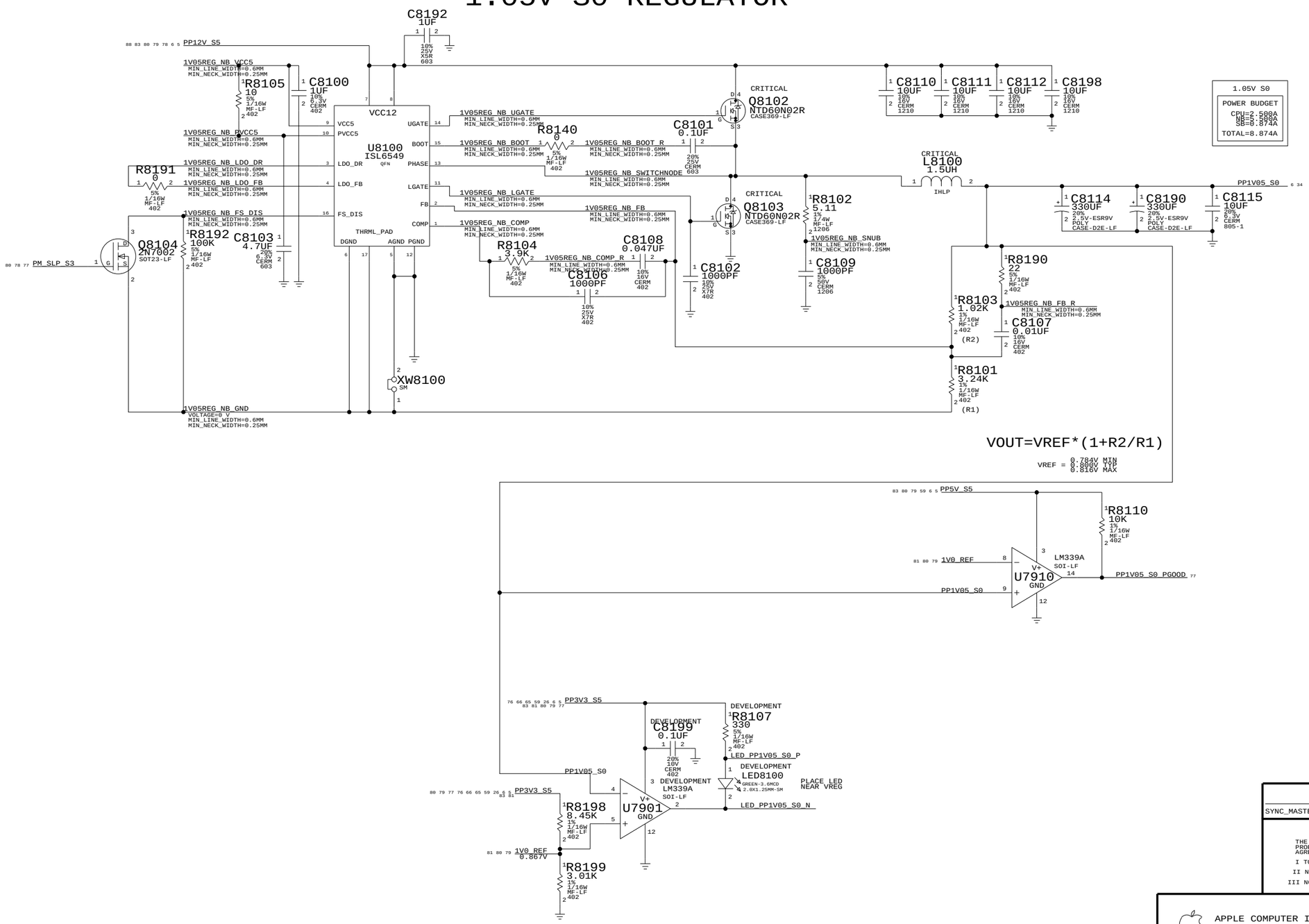

1.05V VREG

SYNC_MASTER=M38-RT SYNC_DATE=05/18/2005

NOTICE OF PROPRIETARY PROPERTY

THE INFORMATION CONTAINED HEREIN IS THE PROPRIETARY PROPERTY OF APPLE COMPUTER, INC. THE POSSESSOR AGREES TO THE FOLLOWING

I TO MAINTAIN THE DOCUMENT IN CONFIDENCE

II NOT TO REPRODUCE OR COPY IT

III NOT TO REVEAL OR PUBLISH IN WHOLE OR PART

APPLE COMPUTER INC.

SIZE	DRAWING NUMBER	REV.
D	051-6949	09

SCALE NONE SHT 81 OF 111

www.teknisi-indonesia.com

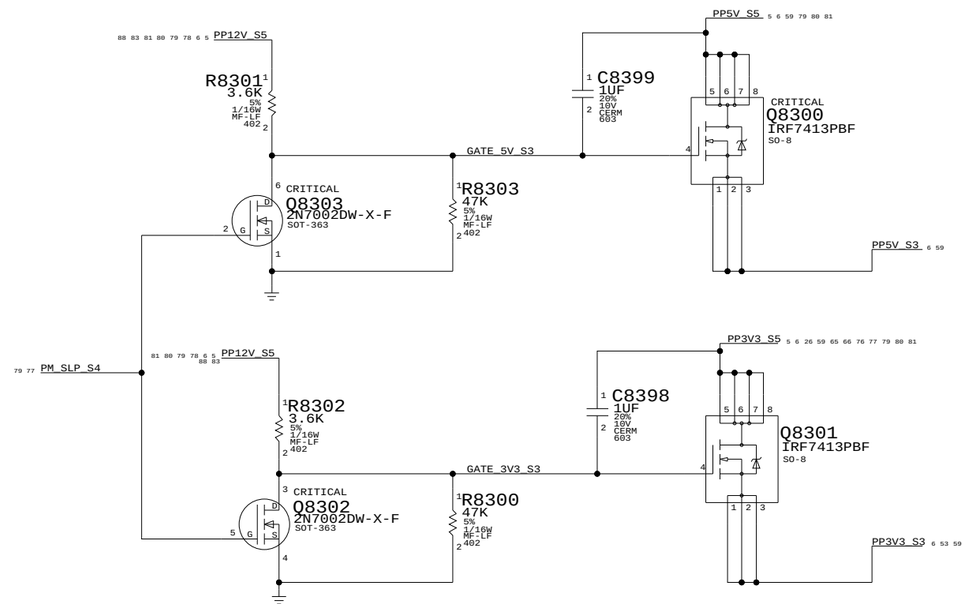

5V & 3.3V Fets

SYNC_MASTER=FINO-PC SYNC_DATE=04/12/2005

NOTICE OF PROPRIETARY PROPERTY

THE INFORMATION CONTAINED HEREIN IS THE PROPRIETARY PROPERTY OF APPLE COMPUTER, INC. THE POSSESSOR AGREES TO THE FOLLOWING

I TO MAINTAIN THE DOCUMENT IN CONFIDENCE

II NOT TO REPRODUCE OR COPY IT

III NOT TO REVEAL OR PUBLISH IN WHOLE OR PART

APPLE COMPUTER INC.

SIZE	DRAWING NUMBER	REV.
D	051-6949	09
SCALE NONE	SHT 83 OF 111	

www.teknisi-indonesia.com

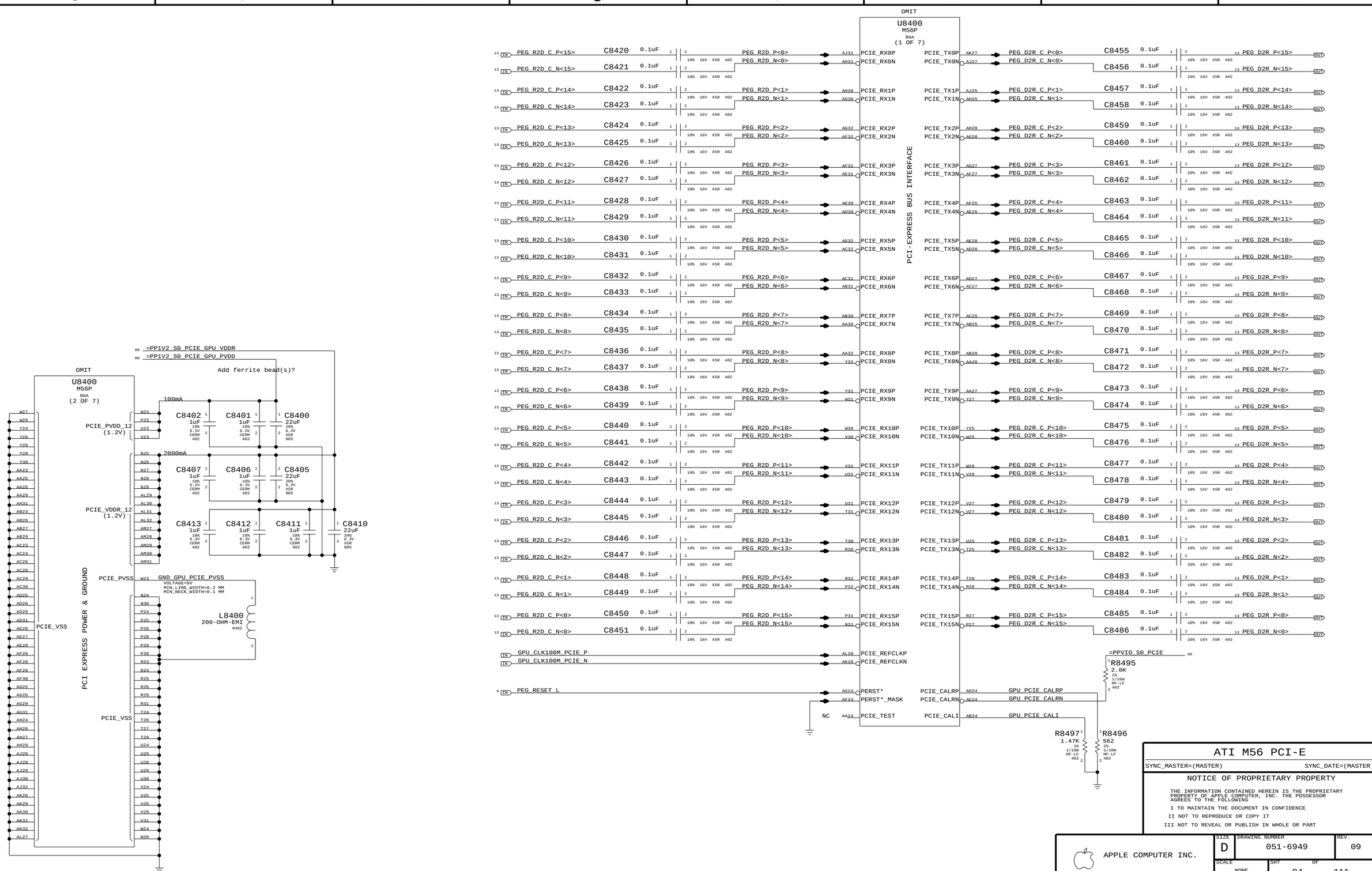

www.teknisi-indonesia.com

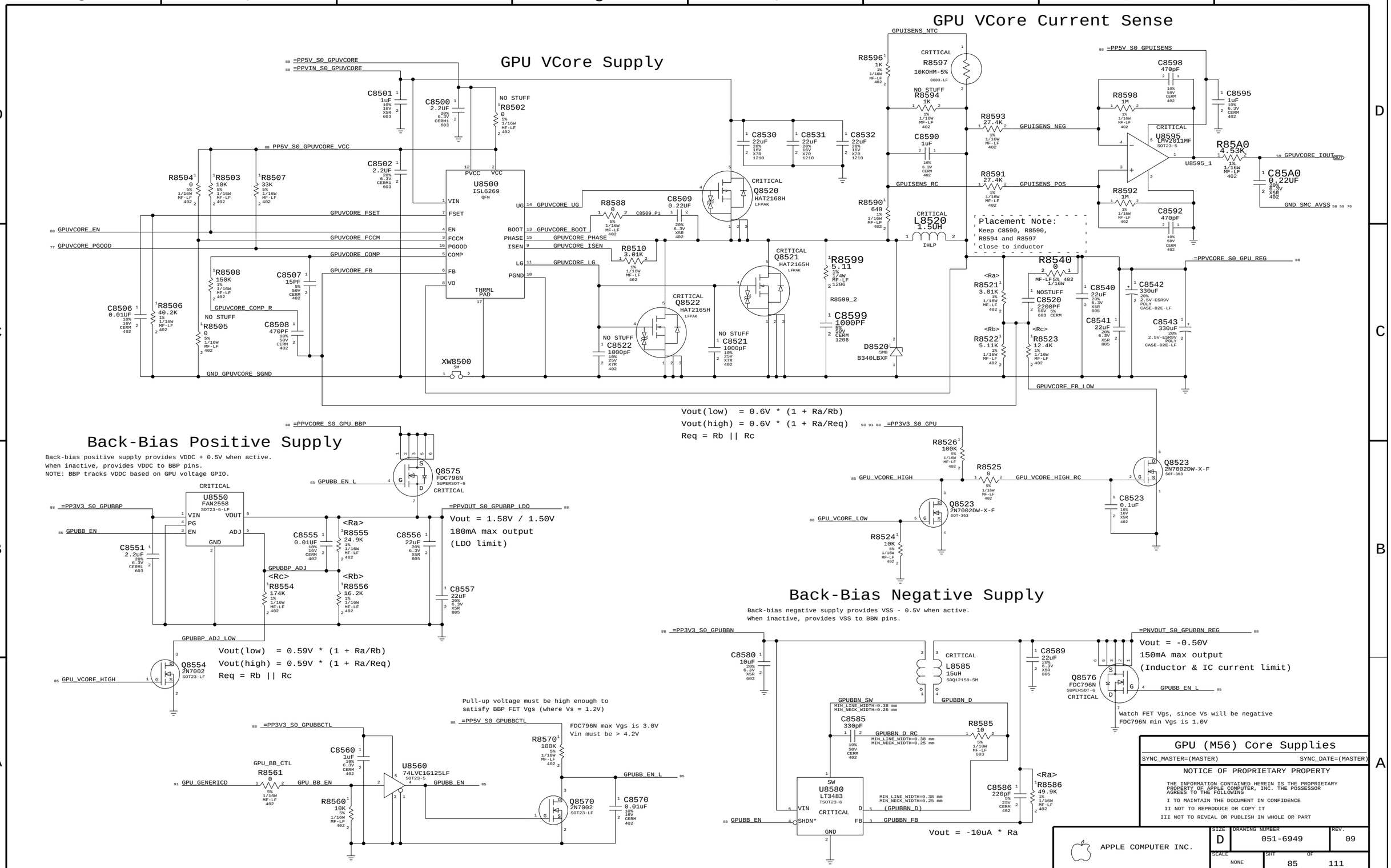

www.teknisi-indonesia.com

Page Notes

Power aliases required by this page:
- =PP1V5_GPU_VDD15
- =PP1VR1V3_GPU_VCORE

Signal aliases required by this page:
(NONE)

BOM options provided by this page:
(NONE)

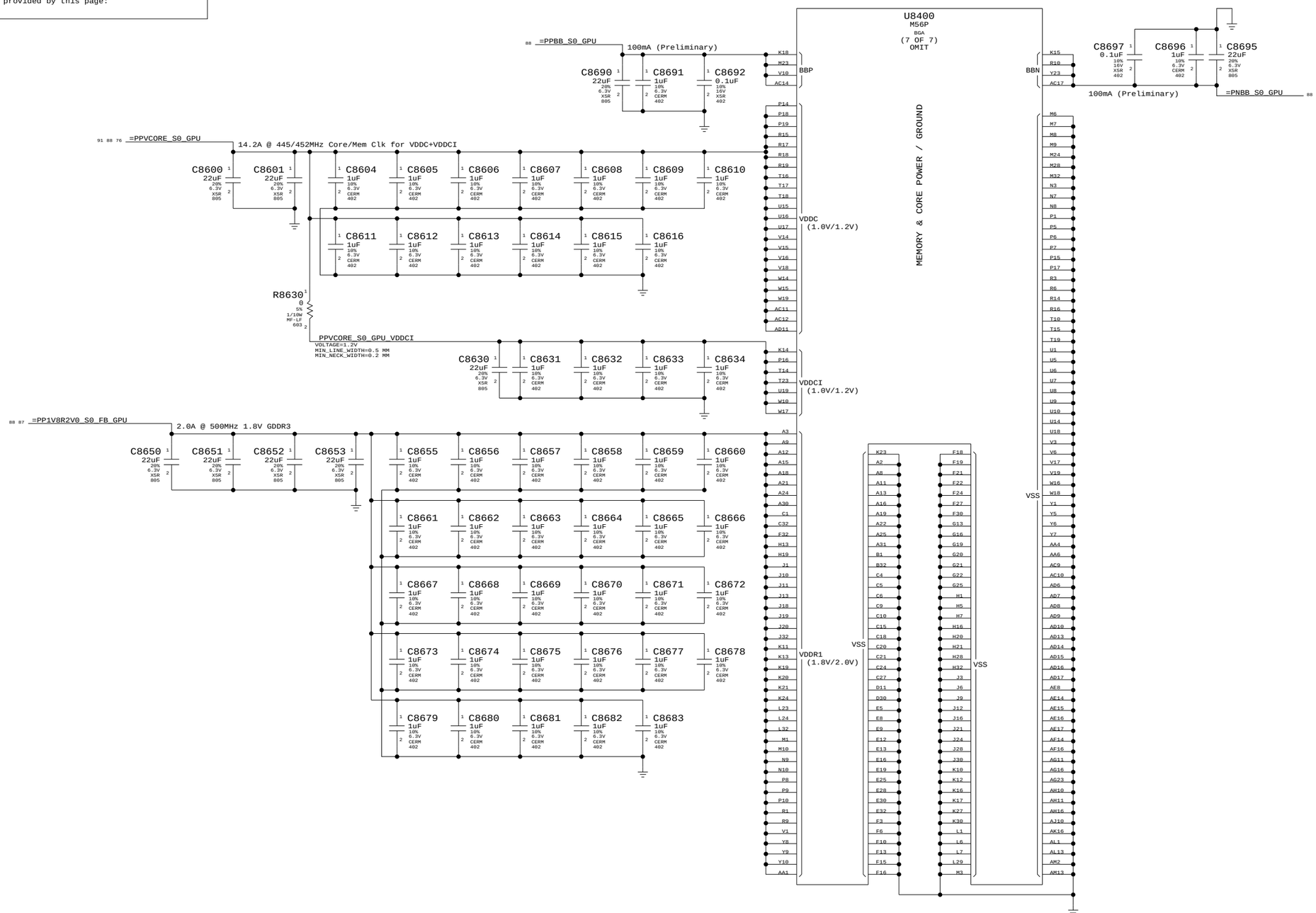

ATI M56 Core Power

SYNC_MASTER=(MASTER) SYNC_DATE=(MASTER)

NOTICE OF PROPRIETARY PROPERTY

THE INFORMATION CONTAINED HEREIN IS THE PROPRIETARY PROPERTY OF APPLE COMPUTER, INC. THE POSSESSOR AGREES TO THE FOLLOWING

I TO MAINTAIN THE DOCUMENT IN CONFIDENCE
II NOT TO REPRODUCE OR COPY IT
III NOT TO REVEAL OR PUBLISH IN WHOLE OR PART

APPLE COMPUTER INC.

SIZE	DRAWING NUMBER	REV.
D	051-6949	09
SCALE NONE	SHT 86 OF 111	

www.teknisi-indonesia.com

Page Notes

Power aliases required by this page:
- =PP1V8R2V0_S0_FB_GPU

Signal aliases required by this page:
(NONE)

BOM options provided by this page:
(NONE)

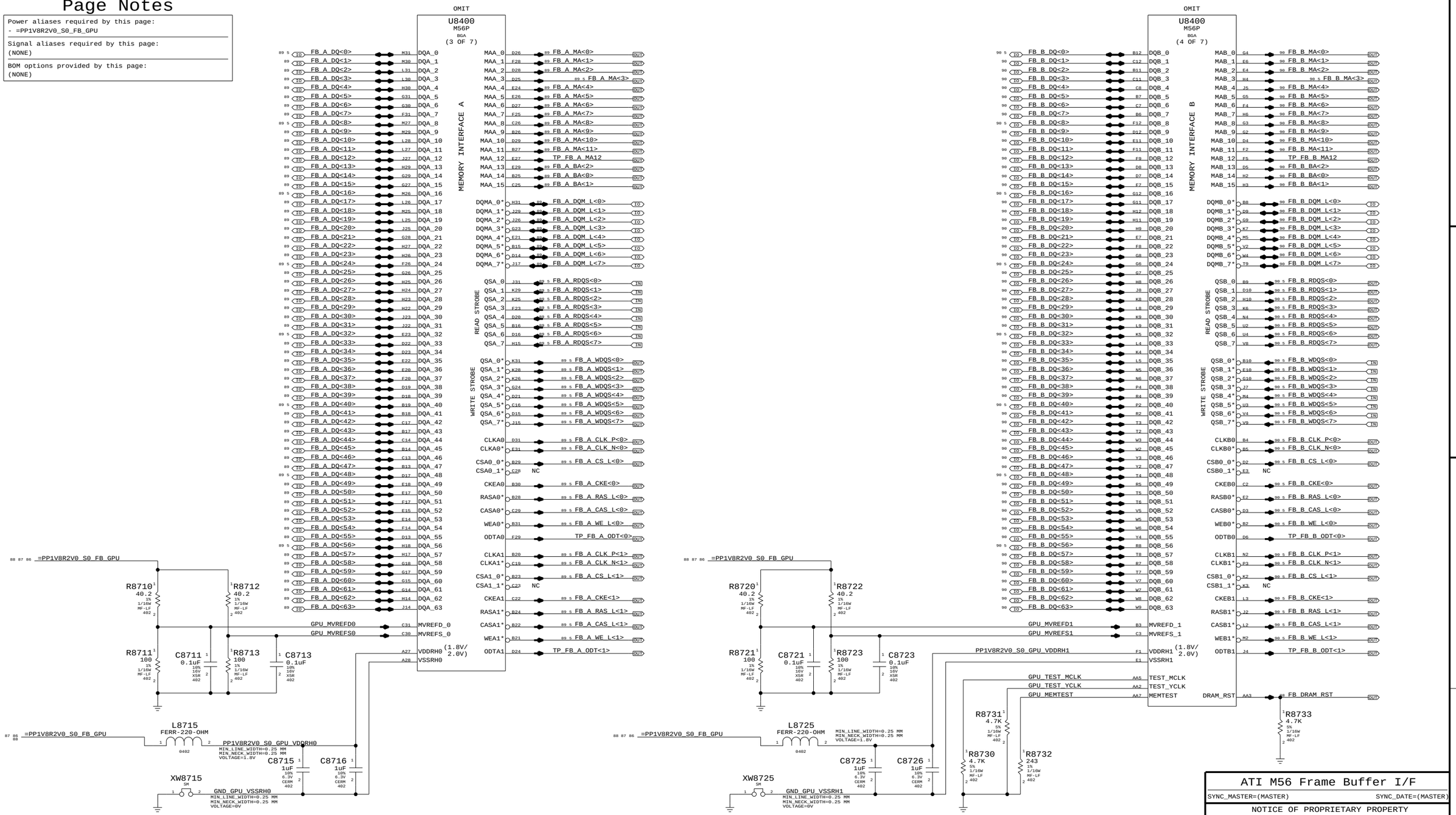

ATI M56 Frame Buffer I/F

SYNC_MASTER=(MASTER) SYNC_DATE=(MASTER)

NOTICE OF PROPRIETARY PROPERTY

THE INFORMATION CONTAINED HEREIN IS THE PROPRIETARY PROPERTY OF APPLE COMPUTER, INC. THE POSSESSOR AGREES TO THE FOLLOWING

I TO MAINTAIN THE DOCUMENT IN CONFIDENCE

II NOT TO REPRODUCE OR COPY IT

III NOT TO REVEAL OR PUBLISH IN WHOLE OR PART

APPLE COMPUTER INC.

SIZE	DRAWING NUMBER	REV.
D	051-6949	09
SCALE NONE	SHT 87 OF 111	

www.teknisi-indonesia.com

"S0" GPU RAILS

ONLY ON IN RUN

59 PP1V0R1V2_S0_GPU
MAKE_BASE=TRUE
MIN_LINE_WIDTH=0.6MM
MIN_NECK_WIDTH=0.125MM
VOLTAGE=1.2V
- =PPVCORE_S0_GPU_REG 85
- =PPVCORE_S0_GPU 76 86 91
- =PPVCORE_S0_GPU_BBP 85

85 PP5V_S0_GPUVCORE_VCC
MAKE_BASE=TRUE
MIN_LINE_WIDTH=0.6MM
MIN_NECK_WIDTH=0.125MM
VOLTAGE=5V
- 10 1 — R8800 1/16W 603 MF-LF 5% — 2
- =PP5V_S0_GPUVCORE 85
- GPUVCORE_VCC
MAKE_BASE=TRUE
MIN_LINE_WIDTH=0.6MM
MIN_NECK_WIDTH=0.125MM
VOLTAGE=5V

PP1V2_GPU_IO_S0
MAKE_BASE=TRUE
MIN_LINE_WIDTH=0.6MM
MIN_NECK_WIDTH=0.125MM
VOLTAGE=1.2V
- =PP1V2_S0_PCIE_GPU_VDDR 84
- =PP1V2_S0_PCIE_GPU_PVDD 84
- =PPVIO_S0_PCIE 84
- =PP1V2_S0_REG 77
- =PP1V2_S0_GPU_VDDPLL 91

PPBB_S0_GPU
MAKE_BASE=TRUE
MIN_LINE_WIDTH=0.5MM
MIN_NECK_WIDTH=0.125MM
VOLTAGE=1.2V
- =PPVOUT_S0_GPUBBP_LDO 85
- =PPBB_S0_GPU 86

PNBB_S0_GPU
MAKE_BASE=TRUE
MIN_LINE_WIDTH=0.5MM
MIN_NECK_WIDTH=0.125MM
VOLTAGE=0V
- =PNVOUT_S0_GPUBBN_REG 85
- =PNBB_S0_GPU 86

76 61 59 41 26 10 6 PP3V3_S0
- =PP3V3_S0_GPUBBP 85
- =PP3V3_S0_GPUBBCTL 85
- =PP3V3_DDC_DVI 97
- =PP3V3_S0_LCD 94
- =PP3V3_S0_GPU_VDDR3 88 91
- =PP3V3_S0_GPU 85 91 93
- =PP3V3_S0_GPUBBN 85
- =PP3V3_S0_GPU_CLOCKS
- =PP3V3_DDC_LCD 94
- =PP3V3_GPU 94

77 6 PP2V5_S0
- =PP2V5_S0_GPU_PVDD 91
- =PP2V5_S0_GPU_VDD25 91
- =PP2V5_S0_GPU_VDDC_CT 91
- =PP2V5_S0_GPU 93

PP1V8R2V0_S0_FB_GPU
MAKE_BASE=TRUE
MIN_LINE_WIDTH=0.6MM
MIN_NECK_WIDTH=0.125MM
VOLTAGE=1.8V
- =PP1V8_S0_FB_VDD 89 90
- =PP1V8R3V3_S0_GPU_VDDR4 91
- =PP1V8R3V3_S0_GPU_VDDR5 91
- =PP1V8_S0_FB_VDDQ 89 90
- PP1V8_S0 78
- =PP1V8R2V0_S0_FB_GPU 86 87

83 81 80 79 78 6 5 PP12V_S5
- =PPVIN_S0_GPUVCORE 85

76 6 PP12V_S0
- =PP12V_GPU 94

97 75 6 PP5V_S0
- =PP5V_S0_GPUBBCTL 85
- =PP5V_S0_DVI_DDC 97
- =PP5V_S0_GPUISENS 85

85 GPUVCORE_EN — 33 1 — R8801 1/16W 402 MF-LF 5% — 2 — PM_SLP_S3_L 6 23 58 77 79

87 FB_DRAM_RST
MAKE_BASE=TRUE
- DRAM_RST 5 89 90

M56 GPIOS

=PP3V3_S0_GPU_VDDR3 88 91

94 91 GPU_GPIO_0 — 10K 1 — R8813 1/16W 402 MF-LF 5% — 2

GPIO 0 = TRANSMITTER POWER SAVINGS ENABLE
INTERNAL PULL DOWN, ATI RECOMMENDS HIGH

91 GPU_GPIO_1 — 10K 1 — R8802 1/16W 402 MF-LF 5% — 2

GPIO 1 = TRANSMITTER DE-EMPHASIS ENABLE
INTERNAL PULL DOWN, ATI RECOMMENDS HIGH

91 GPU_GPIO_2 — 10K 1 — NOSTUFF R8803 1/16W 402 MF-LF 5% — 2

91 GPU_GPIO_3 — 10K 1 — NOSTUFF R8804 1/16W 402 MF-LF 5% — 2

91 GPU_GPIO_4 — 10K 1 — NOSTUFF R8805 1/16W 402 MF-LF 5% — 2

GPIO 4 = DEBUG SIGNALS OUT

91 GPU_GPIO_5 — 10K 1 — R8806 1/16W 402 MF-LF 5% — 2

91 GPU_GPIO_6 — 10K 1 — NOSTUFF R8807 1/16W 402 MF-LF 5% — 2

TP_GPU_GPIO_7
MAKE_BASE=TRUE
- GPU_GPIO_7 91

91 GPU_GPIO_8 — 10K 1 — NOSTUFF R8808 1/16W 402 MF-LF 5% — 2

NC_GPU_GPIO_10
MAKE_BASE=TRUE
- GPU_GPIO_10 91

91 GPU_GPIO_9 — 10K 1 — NOSTUFF R8809 1/16W 402 MF-LF 5% — 2

91 GPU_GPIO_13 — 10K 1 — NOSTUFF R8812 1/16W 402 MF-LF 5% — 2

ATI_FB_256M

91 GPU_GPIO_12 — 10K 1 — R8810 1/16W 402 MF-LF 5% — 2

91 GPU_GPIO_11 — 10K 1 — NOSTUFF R8811 1/16W 402 MF-LF 5% — 2

GPIO 9,13,12,11 = ROM ID CFG
INTERNAL PULL DOWN
0010 = 256 M APERATURE SIZE

ATI_FB_256M

91 GPU_GPIO_24 — 10K 1 — R8830 1/16W 402 MF-LF 5% — 2

ATI_FB_HYNIX

91 GPU_GPIO_27 — 10K 1 — R8831 1/16W 402 MF-LF 5% — 2

91 GPU_GPIO_28 — 10K 1 — R8832 1/16W 402 MF-LF 5% — 2

TMDS_PANEL

91 GPU_GPIO_29 — 10K 1 — R8833 1/16W 402 MF-LF 5% — 2

85 GPU_VCORE_LOW
MAKE_BASE=TRUE
- GPU_GPIO_15 91
- 10K 1 — R8850 1/16W 402 MF-LF 5% — 2

GPIO 15 = SWITCH CORE VOLTAGE HIGH TO LOW
EXTERNAL PULL DOWN RECOMMENDED

TP_GPU_GPIO_14
MAKE_BASE=TRUE
- GPU_GPIO_14 91

TP_GPU_GPIO_17
MAKE_BASE=TRUE
- GPU_GPIO_17 91

TP_GPU_VGA_R
MAKE_BASE=TRUE
- GPU_VGA_R 93

TP_GPU_VGA_G
MAKE_BASE=TRUE
- GPU_VGA_G 93

TP_GPU_VGA_B
MAKE_BASE=TRUE
- GPU_VGA_B 93

TP_GPU_VGA_HSYNC
MAKE_BASE=TRUE
- GPU_VGA_HSYNC 93

TP_GPU_VGA_VSYNC
MAKE_BASE=TRUE
- GPU_VGA_VSYNC 93

TP_GPU_TV_Y
MAKE_BASE=TRUE
- GPU_TV_Y 93

TP_GPU_TV_COMP
MAKE_BASE=TRUE
- GPU_TV_COMP 93

TP_GPU_TV_C
MAKE_BASE=TRUE
- GPU_TV_C 93

TP_GPU_DDC_B_CLK
MAKE_BASE=TRUE
- GPU_DDC_B_CLK 93

TP_GPU_DDC_B_DATA
MAKE_BASE=TRUE
- GPU_DDC_B_DATA 93

GPU MISC

www.teknisi-indonesia.com

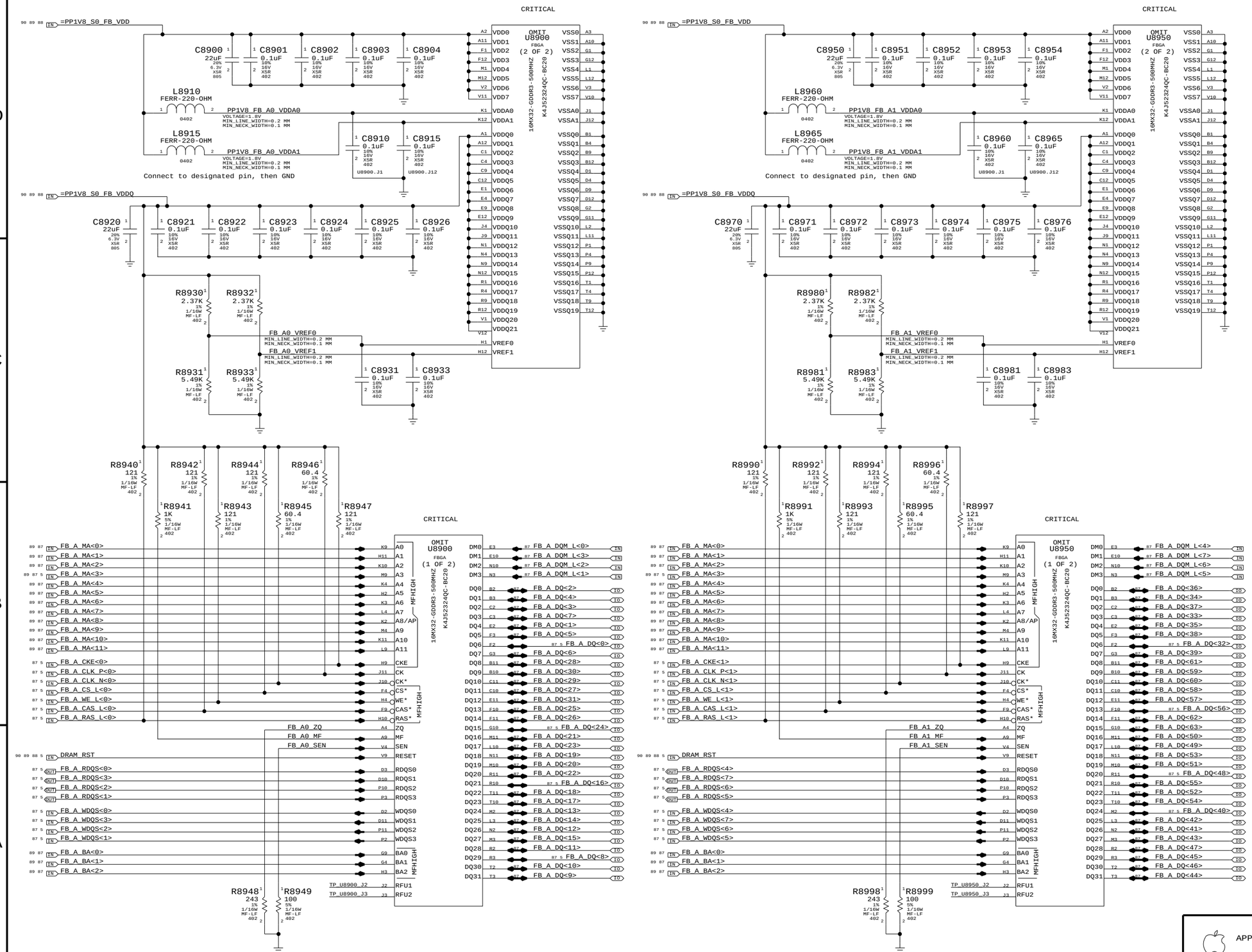

Page Notes

Power aliases required by this page:
- =PP1V8_S0_FB_VDD
- =PP1V8_S0_FB_VDDQ

Signal aliases required by this page:
(NONE)

BOM options provided by this page:
(NONE)

GDDR3 Frame Buffer A

SYNC_MASTER=(MASTER) SYNC_DATE=(MASTER)

NOTICE OF PROPRIETARY PROPERTY

THE INFORMATION CONTAINED HEREIN IS THE PROPRIETARY PROPERTY OF APPLE COMPUTER, INC. THE POSSESSOR AGREES TO THE FOLLOWING

I TO MAINTAIN THE DOCUMENT IN CONFIDENCE

II NOT TO REPRODUCE OR COPY IT

III NOT TO REVEAL OR PUBLISH IN WHOLE OR PART

APPLE COMPUTER INC.

SIZE	DRAWING NUMBER	REV.
D	051-6949	09

SCALE NONE SHT 89 OF 111

www.teknisi-indonesia.com

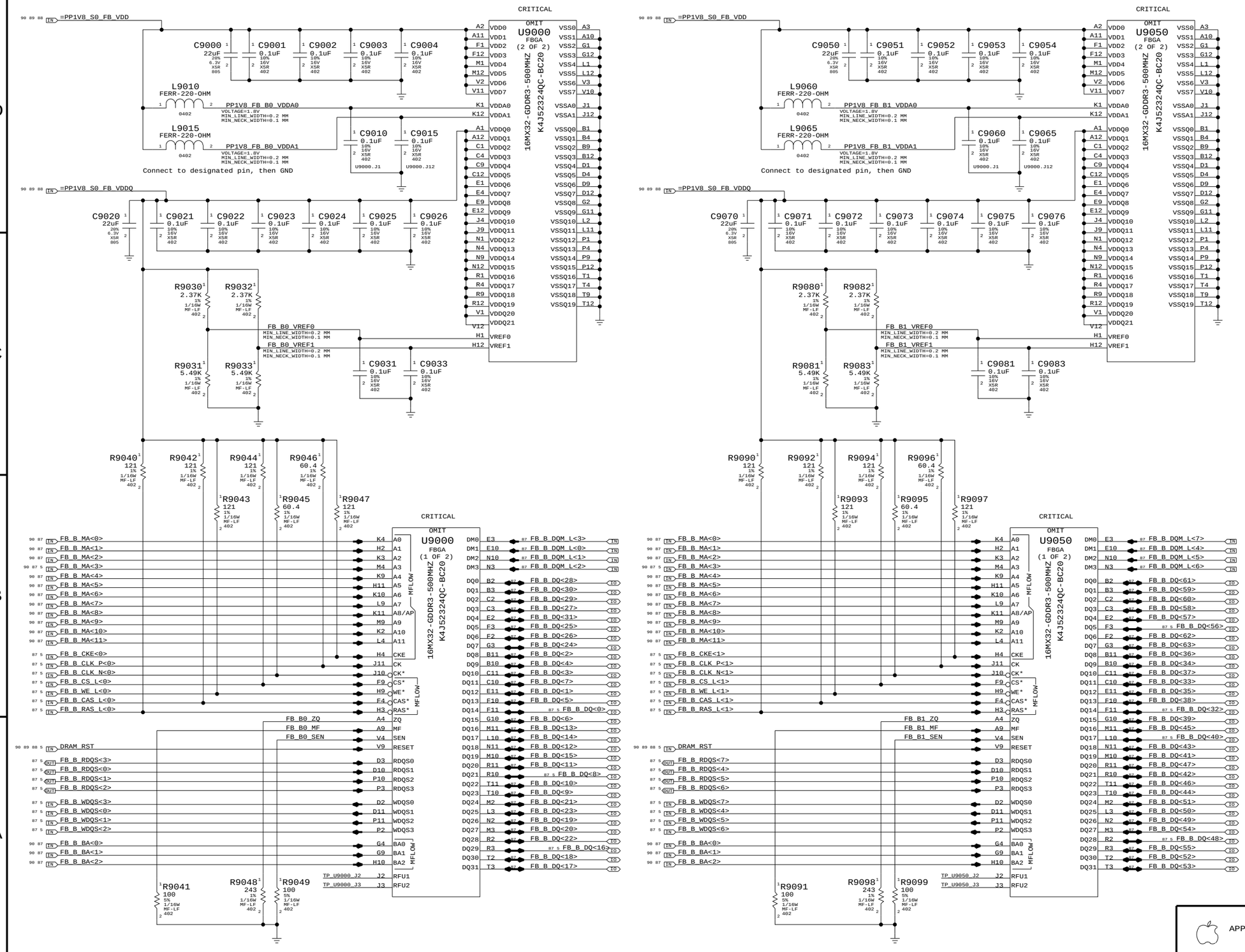

Page Notes

Power aliases required by this page:
- =PP1V8_S0_FB_VDD
- =PP1V8_S0_FB_VDDQ

Signal aliases required by this page:
(NONE)

BOM options provided by this page:
(NONE)

GDDR3 Frame Buffer B

SYNC_MASTER=(MASTER) SYNC_DATE=(MASTER)

NOTICE OF PROPRIETARY PROPERTY

THE INFORMATION CONTAINED HEREIN IS THE PROPRIETARY PROPERTY OF APPLE COMPUTER, INC. THE POSSESSOR AGREES TO THE FOLLOWING

I TO MAINTAIN THE DOCUMENT IN CONFIDENCE

II NOT TO REPRODUCE OR COPY IT

III NOT TO REVEAL OR PUBLISH IN WHOLE OR PART

APPLE COMPUTER INC.

SIZE	DRAWING NUMBER	REV.
D	051-6950	06

SCALE: NONE SHT 90 OF 111

www.teknisi-indonesia.com

Page Notes

Power aliases required by this page:
- =PP3V3_GPU_GPIOS
- =PP2V5_PVDD
- =PP1V8_GPU_LVDS_PLL

Signal aliases required by this page:
- =I2C_GPU_TMDS_SDA - I2C data line for external TMDS transmitters
- =I2C_GPU_TMDS_SCL - I2C clock line for external TMDS transmitters

BOM options provided by this page:
(NONE)

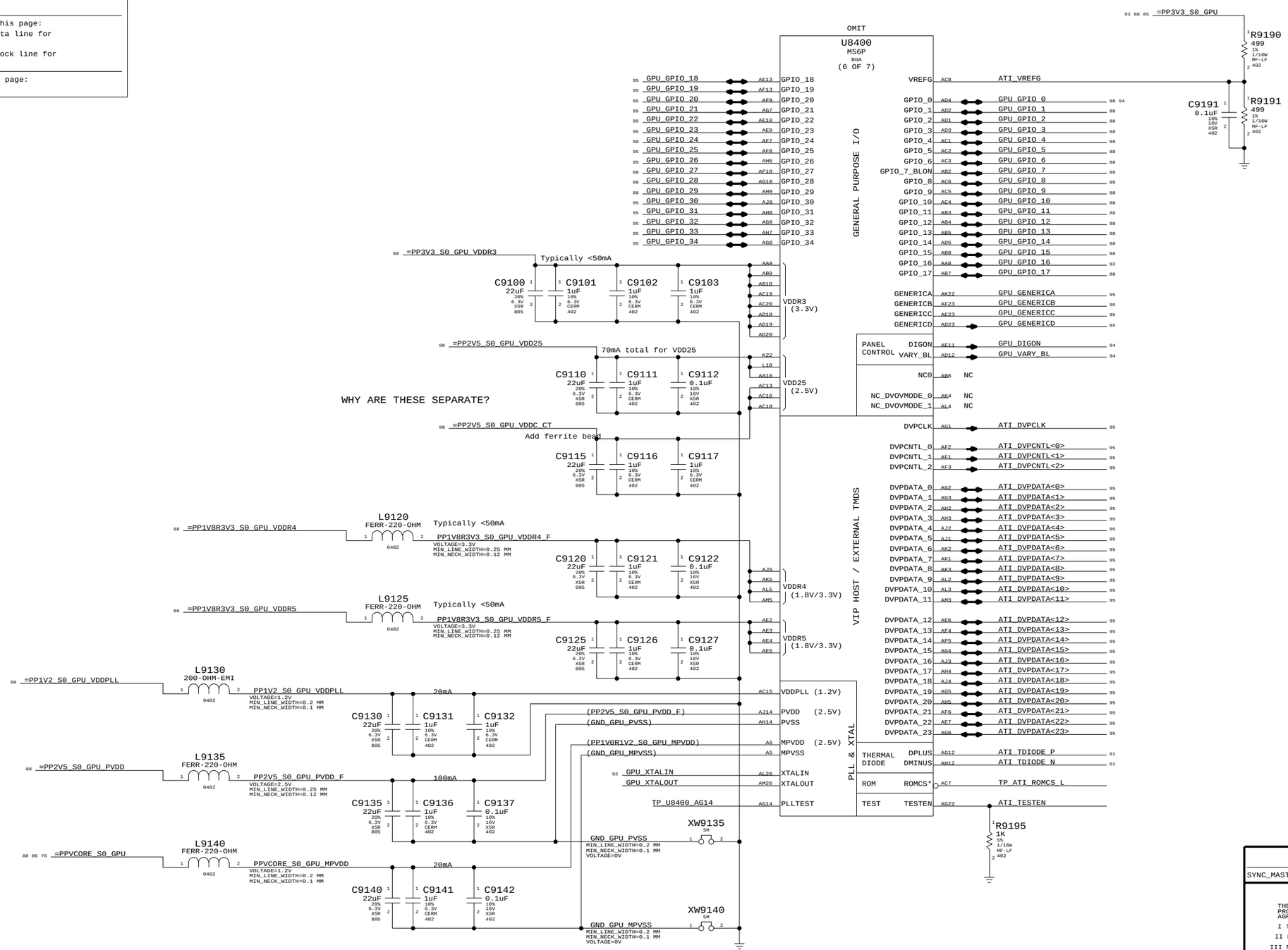

ATI M56 GPIO/DVO/Misc

SYNC_MASTER=(MASTER) SYNC_DATE=(MASTER)

NOTICE OF PROPRIETARY PROPERTY

THE INFORMATION CONTAINED HEREIN IS THE PROPRIETARY PROPERTY OF APPLE COMPUTER, INC. THE POSSESSOR AGREES TO THE FOLLOWING

I TO MAINTAIN THE DOCUMENT IN CONFIDENCE

II NOT TO REPRODUCE OR COPY IT

III NOT TO REVEAL OR PUBLISH IN WHOLE OR PART

APPLE COMPUTER INC.

SIZE	DRAWING NUMBER	REV.
D	051-6949	09
SCALE NONE	SHT 91 OF 111	

www.teknisi-indonesia.com

Page Notes

Power aliases required by this page:
- =PP3V3_GPU_CLOCKS
- =PPVIN_GPU_LVDDR_LDO
- =PP2V5_GPU_LVDDR_LDO
- =PP3V3_GPU_PWRSEQ
- =PP2V5_GPU_PWRSEQ
- =PP1V8_GPU_PWRSEQ
- =PP1V5_GPU_PWRSEQ

Signal aliases required by this page:
(NONE)

BOM options provided by this page:
- GPU_SS
- GPU_LVDDR_2V8

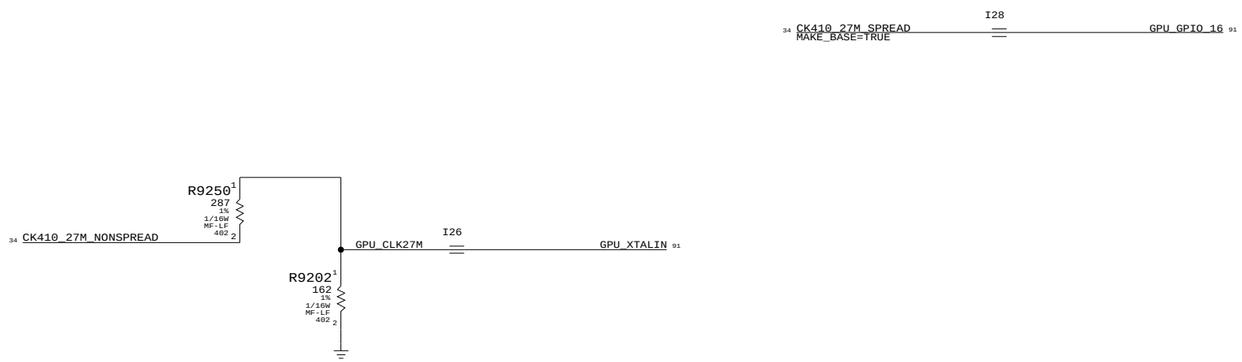

GPU CLOCKS

SYNC_MASTER=BOZEMAN SYNC_DATE=05/21/2005

NOTICE OF PROPRIETARY PROPERTY

THE INFORMATION CONTAINED HEREIN IS THE PROPRIETARY PROPERTY OF APPLE COMPUTER, INC. THE POSSESSOR AGREES TO THE FOLLOWING

I TO MAINTAIN THE DOCUMENT IN CONFIDENCE
II NOT TO REPRODUCE OR COPY IT
III NOT TO REVEAL OR PUBLISH IN WHOLE OR PART

APPLE COMPUTER INC.

SIZE	DRAWING NUMBER	REV.
D	051-6949	09

SCALE NONE SHT 92 OF 111

www.teknisi-indonesia.com

Page Notes

Power aliases required by this page:
- =PP2V5_S0_GPU
- =PP1V8R2V5_S0_GPU_LVDDR

Signal aliases required by this page:
(NONE)

BOM options provided by this page:
(NONE)

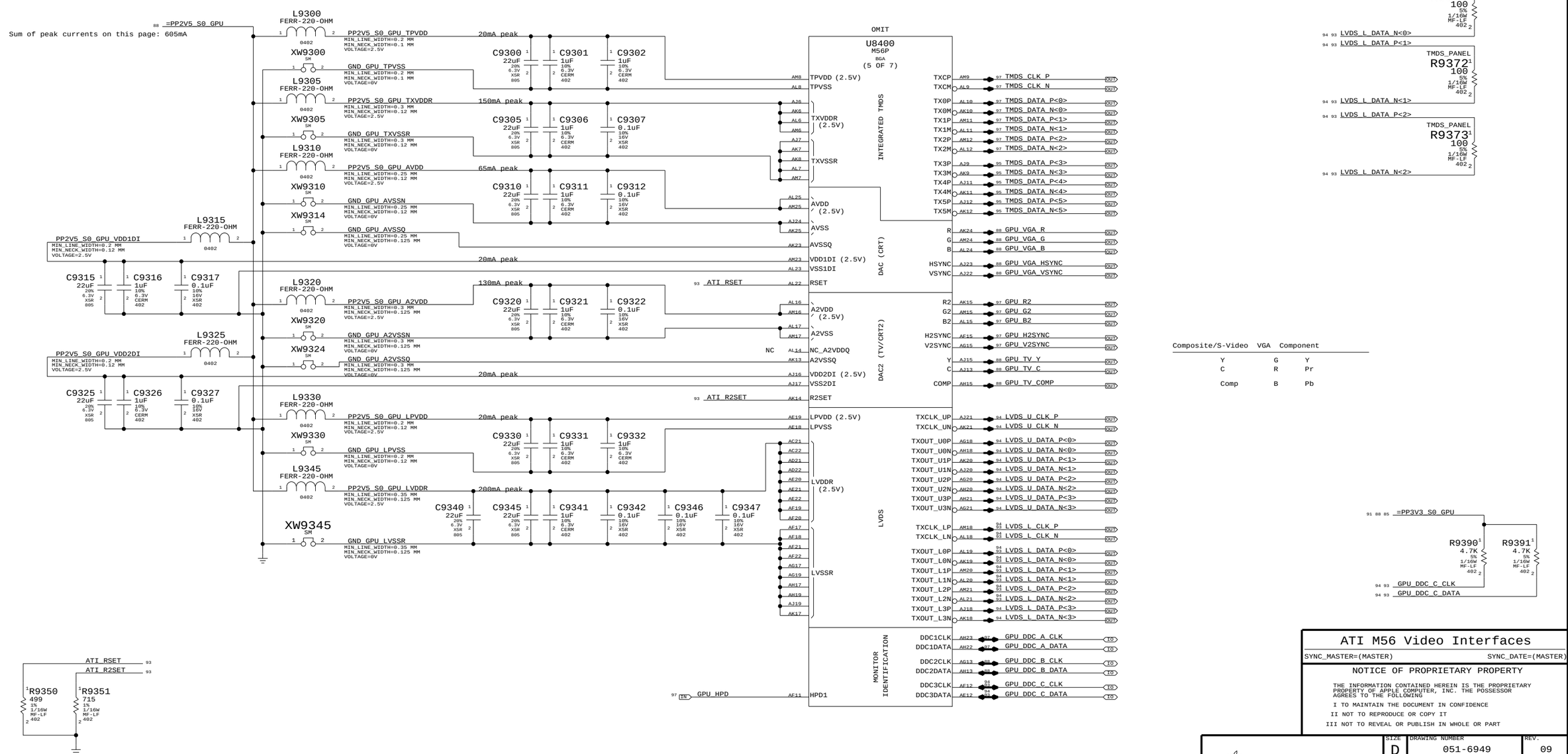

ATI M56 Video Interfaces

SYNC_MASTER=(MASTER) SYNC_DATE=(MASTER)

NOTICE OF PROPRIETARY PROPERTY

THE INFORMATION CONTAINED HEREIN IS THE PROPRIETARY PROPERTY OF APPLE COMPUTER, INC. THE POSSESSOR AGREES TO THE FOLLOWING

I TO MAINTAIN THE DOCUMENT IN CONFIDENCE

II NOT TO REPRODUCE OR COPY IT

III NOT TO REVEAL OR PUBLISH IN WHOLE OR PART

APPLE COMPUTER INC.

SIZE	DRAWING NUMBER	REV.
D	051-6949	09

SCALE NONE SHT 93 OF 111

www.teknisi-indonesia.com

LCD (LVDS) INTERFACE

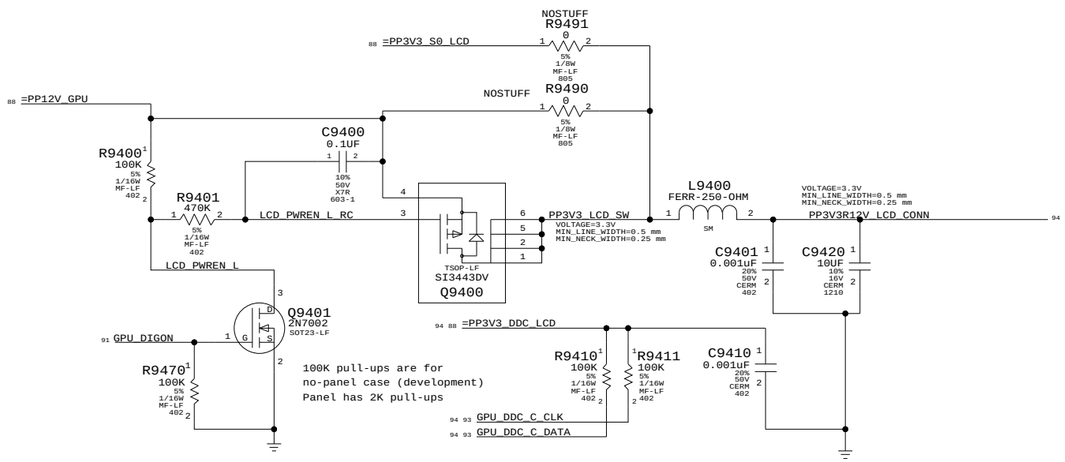

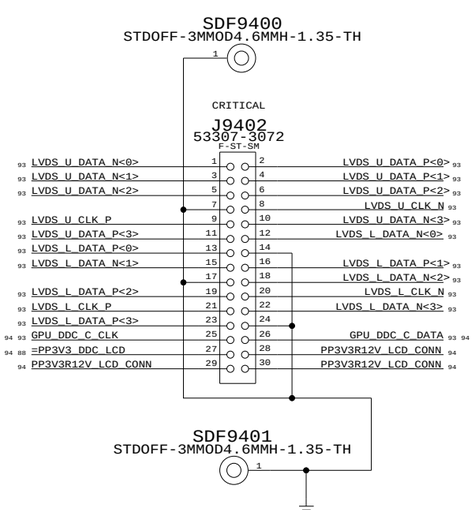

INVERTER INTERFACE

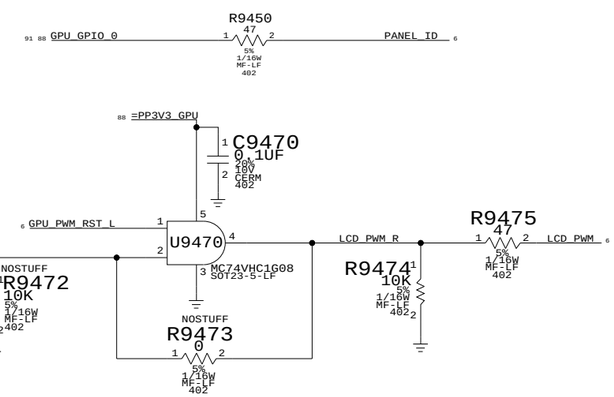

GATE TO PREVENT LEAKAGE ONTO PWM
MIGHT BE ABLE TO BYPASS IF SMC DRIVES SIGNAL

Internal Display Conns

SYNC_MASTER=BOZEMAN SYNC_DATE=04/27/2005

NOTICE OF PROPRIETARY PROPERTY

THE INFORMATION CONTAINED HEREIN IS THE PROPRIETARY PROPERTY OF APPLE COMPUTER, INC. THE POSSESSOR AGREES TO THE FOLLOWING

I TO MAINTAIN THE DOCUMENT IN CONFIDENCE

II NOT TO REPRODUCE OR COPY IT

III NOT TO REVEAL OR PUBLISH IN WHOLE OR PART

APPLE COMPUTER INC.

SIZE	DRAWING NUMBER	REV.
D	051-6950	06

SCALE NONE SHT 94 OF 111

www.teknisi-indonesia.com

TP_TMDS_DATA_P<3>	MAKE_BASE=TRUE	TMDS_DATA_P<3>	93
TP_TMDS_DATA_N<3>	MAKE_BASE=TRUE	TMDS_DATA_N<3>	93
TP_TMDS_DATA_P<4>	MAKE_BASE=TRUE	TMDS_DATA_P<4>	93
TP_TMDS_DATA_N<4>	MAKE_BASE=TRUE	TMDS_DATA_N<4>	93
TP_TMDS_DATA_P<5>	MAKE_BASE=TRUE	TMDS_DATA_P<5>	93
TP_TMDS_DATA_N<5>	MAKE_BASE=TRUE	TMDS_DATA_N<5>	93
TP_ATI_DVPDATA<23>	MAKE_BASE=TRUE	ATI_DVPDATA<23>	91
TP_ATI_DVPDATA<22>	MAKE_BASE=TRUE	ATI_DVPDATA<22>	91
TP_ATI_DVPDATA<21>	MAKE_BASE=TRUE	ATI_DVPDATA<21>	91
TP_ATI_DVPDATA<20>	MAKE_BASE=TRUE	ATI_DVPDATA<20>	91
TP_ATI_DVPDATA<19>	MAKE_BASE=TRUE	ATI_DVPDATA<19>	91
TP_ATI_DVPDATA<18>	MAKE_BASE=TRUE	ATI_DVPDATA<18>	91
TP_ATI_DVPDATA<17>	MAKE_BASE=TRUE	ATI_DVPDATA<17>	91
TP_ATI_DVPDATA<16>	MAKE_BASE=TRUE	ATI_DVPDATA<16>	91
TP_ATI_DVPDATA<15>	MAKE_BASE=TRUE	ATI_DVPDATA<15>	91
TP_ATI_DVPDATA<14>	MAKE_BASE=TRUE	ATI_DVPDATA<14>	91
TP_ATI_DVPDATA<13>	MAKE_BASE=TRUE	ATI_DVPDATA<13>	91
TP_ATI_DVPDATA<12>	MAKE_BASE=TRUE	ATI_DVPDATA<12>	91
TP_ATI_DVPDATA<11>	MAKE_BASE=TRUE	ATI_DVPDATA<11>	91
TP_ATI_DVPDATA<10>	MAKE_BASE=TRUE	ATI_DVPDATA<10>	91
TP_ATI_DVPDATA<9>	MAKE_BASE=TRUE	ATI_DVPDATA<9>	91
TP_ATI_DVPDATA<8>	MAKE_BASE=TRUE	ATI_DVPDATA<8>	91
TP_ATI_DVPDATA<7>	MAKE_BASE=TRUE	ATI_DVPDATA<7>	91
TP_ATI_DVPDATA<6>	MAKE_BASE=TRUE	ATI_DVPDATA<6>	91
TP_ATI_DVPDATA<5>	MAKE_BASE=TRUE	ATI_DVPDATA<5>	91
TP_ATI_DVPDATA<4>	MAKE_BASE=TRUE	ATI_DVPDATA<4>	91
TP_ATI_DVPDATA<3>	MAKE_BASE=TRUE	ATI_DVPDATA<3>	91
TP_ATI_DVPDATA<2>	MAKE_BASE=TRUE	ATI_DVPDATA<2>	91
TP_ATI_DVPDATA<1>	MAKE_BASE=TRUE	ATI_DVPDATA<1>	91
TP_ATI_DVPDATA<0>	MAKE_BASE=TRUE	ATI_DVPDATA<0>	91
TP_ATI_DVPCLK	MAKE_BASE=TRUE	ATI_DVPCLK	91
TP_ATI_DVPCNTL<0>	MAKE_BASE=TRUE	ATI_DVPCNTL<0>	91
TP_ATI_DVPCNTL<1>	MAKE_BASE=TRUE	ATI_DVPCNTL<1>	91
TP_ATI_DVPCNTL<2>	MAKE_BASE=TRUE	ATI_DVPCNTL<2>	91

TP_GPU_GPIO<34>	MAKE_BASE=TRUE	GPU_GPIO_34	91
TP_GPU_GPIO<33>	MAKE_BASE=TRUE	GPU_GPIO_33	91
TP_GPU_GPIO<32>	MAKE_BASE=TRUE	GPU_GPIO_32	91
TP_GPU_GPIO<31>	MAKE_BASE=TRUE	GPU_GPIO_31	91
TP_GPU_GPIO<30>	MAKE_BASE=TRUE	GPU_GPIO_30	91
TP_GPU_GPIO<26>	MAKE_BASE=TRUE	GPU_GPIO_26	91
TP_GPU_GPIO<25>	MAKE_BASE=TRUE	GPU_GPIO_25	91
TP_GPU_GPIO<23>	MAKE_BASE=TRUE	GPU_GPIO_23	91
TP_GPU_GPIO<22>	MAKE_BASE=TRUE	GPU_GPIO_22	91
TP_GPU_GPIO<21>	MAKE_BASE=TRUE	GPU_GPIO_21	91
TP_GPU_GPIO<20>	MAKE_BASE=TRUE	GPU_GPIO_20	91
TP_GPU_GPIO<19>	MAKE_BASE=TRUE	GPU_GPIO_19	91
TP_GPU_GPIO<18>	MAKE_BASE=TRUE	GPU_GPIO_18	91
TP_GPU_GENERICA	MAKE_BASE=TRUE	GPU_GENERICA	91
TP_GPU_GENERICB	MAKE_BASE=TRUE	GPU_GENERICB	91
TP_GPU_GENERICC	MAKE_BASE=TRUE	GPU_GENERICC	91

M56 TPS

NOTICE OF PROPRIETARY PROPERTY

THE INFORMATION CONTAINED HEREIN IS THE PROPRIETARY PROPERTY OF APPLE COMPUTER, INC. THE POSSESSOR AGREES TO THE FOLLOWING

I TO MAINTAIN THE DOCUMENT IN CONFIDENCE

II NOT TO REPRODUCE OR COPY IT

III NOT TO REVEAL OR PUBLISH IN WHOLE OR PART

APPLE COMPUTER INC.

SIZE	DRAWING NUMBER	REV.
D	051-6949	09
SCALE NONE	SHT 95 OF 111	

www.teknisi-indonesia.com

DVI INTERFACE

PLACE LEFT SIDE
AS CLOSE TO GPU (U8400)
AS POSSIBLE

PLACE FILTER CLOSE
TO TMDS CONNECTOR

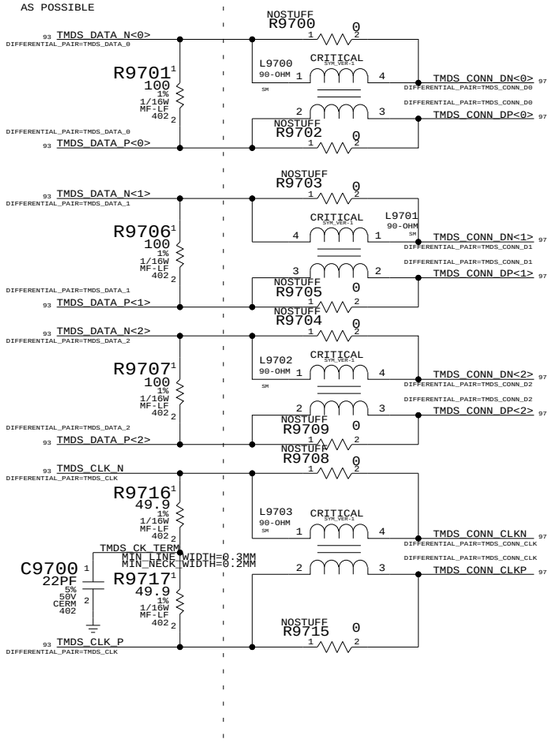

DVI DDC CURRENT LIMIT

(55mA requirement per DVI spec)

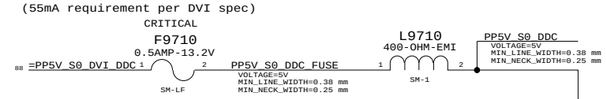

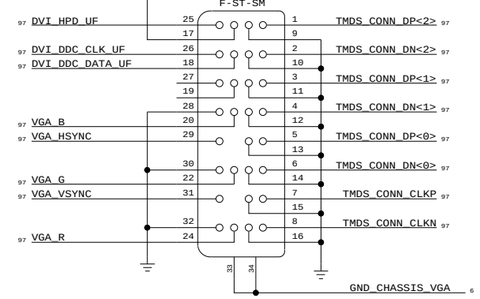

PART#	QTY	DESCRIPTION	REFERENCE DESIGNATOR(S)	CRITICAL	BOM OPTION
514S0114	1	CONN,32-P MINI-DVI RCPT MG3,LF	J9710	CRITICAL	17_INCH_LCD
514S0116	1	CONN,32-P MINI-DVI RCPT MG3,LF	J9710	CRITICAL	20_INCH_LCD

3V LEVEL SHIFTERS

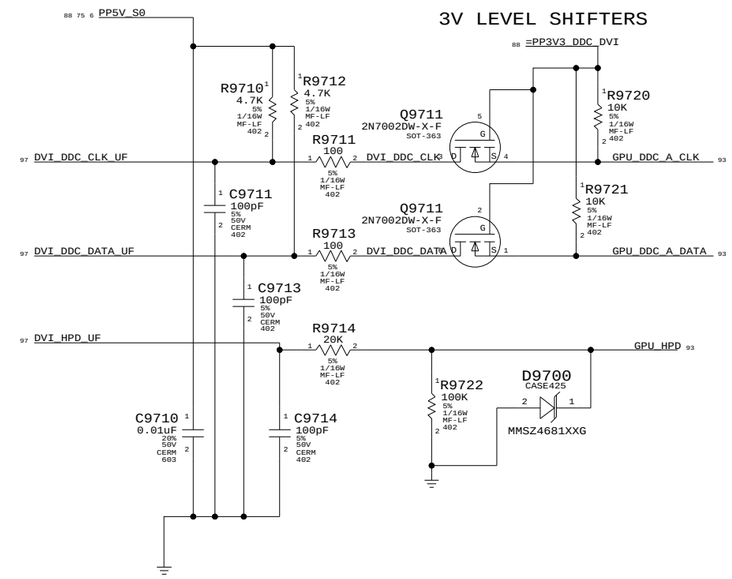

ANALOG FILTERING

PLACE CLOSE TO CONNECTOR

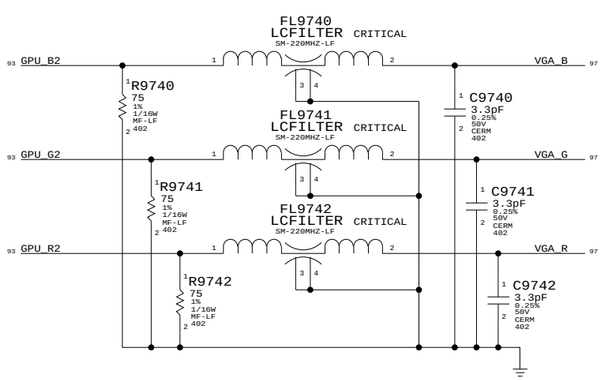

VGA SYNC BUFFERS

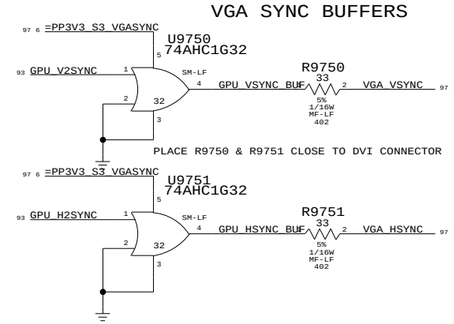

External Display Conns

SYNC_MASTER=BOZEMAN SYNC_DATE=04/14/2005

NOTICE OF PROPRIETARY PROPERTY

THE INFORMATION CONTAINED HEREIN IS THE PROPRIETARY PROPERTY OF APPLE COMPUTER, INC. THE POSSESSOR AGREES TO THE FOLLOWING

I TO MAINTAIN THE DOCUMENT IN CONFIDENCE

II NOT TO REPRODUCE OR COPY IT

III NOT TO REVEAL OR PUBLISH IN WHOLE OR PART

APPLE COMPUTER INC.

SIZE	DRAWING NUMBER	REV.
D	051-6949	09

SCALE NONE SHT 97 OF 111

www.teknisi-indonesia.com

Title: Basenet Report
Design: m39
Date: Nov 15 18:33:07 2005

Base nets and synonyms for m39_lib.M39(@m39_lib.m39(sch_1))

Base Signal	Synonyms	Location([Zone][dir])
0V7_REF	0V7_REF - @m39_lib.M39	79A3
1V0_REF	1V0_REF - @m39_lib.M39	79A5 80A5 81A5 81B3
1V2REG_ITH	1V2REG_ITH - @m39_lib.M39	77B5
1V2REG_ITH_RC	1V2REG_ITH_RC - @m39_lib.M39	77B6
1V2REG_MODE	1V2REG_MODE - @m39_lib.M39	77B5
1V2REG_PGOOD	1V2REG_PGOOD - @m39_lib.M39	77B4
1V2REG_RT	1V2REG_RT - @m39_lib.M39	77B5
1V2REG_RUNSS	1V2REG_RUNSS - @m39_lib.M39	77B5
1V2REG_SGND	1V2REG_SGND - @m39_lib.M39	77A7
1V2REG_SW	1V2REG_SW - @m39_lib.M39	77B4
1V2REG_VFB	1V2REG_VFB - @m39_lib.M39	77B5
1V2REG_VFB_DIV	1V2REG_VFB_DIV - @m39_lib.M39	77A5
1V3_REF	1V3_REF - @m39_lib.M39	80B3
1V05REG_NB_BOOT	1V05REG_NB_BOOT - @m39_lib.M39	81C6
1V05REG_NB_BOOT_R	1V05REG_NB_BOOT_R - @m39_lib.M39	81C5
1V05REG_NB_COMP	1V05REG_NB_COMP - @m39_lib.M39	81C6
1V05REG_NB_COMP_R	1V05REG_NB_COMP_R - @m39_lib.M39	81C5
1V05REG_NB_FB	1V05REG_NB_FB - @m39_lib.M39	81C5
1V05REG_NB_FB_R	1V05REG_NB_FB_R - @m39_lib.M39	81C3
1V05REG_NB_FS_DIS	1V05REG_NB_FS_DIS - @m39_lib.M39	81C7
1V05REG_NB_GND	1V05REG_NB_GND - @m39_lib.M39	81B7
1V05REG_NB_LDO_DR	1V05REG_NB_LDO_DR - @m39_lib.M39	81C7
1V05REG_NB_LDO_FB	1V05REG_NB_LDO_FB - @m39_lib.M39	81C7
1V05REG_NB_LGATE	1V05REG_NB_LGATE - @m39_lib.M39	81C6
1V05REG_NB_PVCC5	1V05REG_NB_PVCC5 - @m39_lib.M39	81D7
1V05REG_NB_SNUB	1V05REG_NB_SNUB - @m39_lib.M39	81C4
1V05REG_NB_SWITCHNODE	1V05REG_NB_SWITCHNODE - @m39_lib.M39	81C5
1V05REG_NB_UGATE	1V05REG_NB_UGATE - @m39_lib.M39	81D6
1V05REG_NB_VCC5	1V05REG_NB_VCC5 - @m39_lib.M39	81D7
1V5REG_PCIE_BOOT	1V5REG_PCIE_BOOT - @m39_lib.M39	80C6
1V5REG_PCIE_BOOT_R	1V5REG_PCIE_BOOT_R - @m39_lib.M39	80C5
1V5REG_PCIE_COMP	1V5REG_PCIE_COMP - @m39_lib.M39	80C6
1V5REG_PCIE_COMP_R	1V5REG_PCIE_COMP_R - @m39_lib.M39	80C5
1V5REG_PCIE_FB	1V5REG_PCIE_FB - @m39_lib.M39	80C5
1V5REG_PCIE_FB_R	1V5REG_PCIE_FB_R - @m39_lib.M39	80C3
1V5REG_PCIE_FS_DIS	1V5REG_PCIE_FS_DIS - @m39_lib.M39	80C7
1V5REG_PCIE_GND	1V5REG_PCIE_GND - @m39_lib.M39	80B7
1V5REG_PCIE_LDO_DR	1V5REG_PCIE_LDO_DR - @m39_lib.M39	80C7
1V5REG_PCIE_LDO_FB	1V5REG_PCIE_LDO_FB - @m39_lib.M39	80C7
1V5REG_PCIE_LGATE	1V5REG_PCIE_LGATE - @m39_lib.M39	80C6
1V5REG_PCIE_PVCC5	1V5REG_PCIE_PVCC5 - @m39_lib.M39	80D7
1V5REG_PCIE_SNUB	1V5REG_PCIE_SNUB - @m39_lib.M39	80C4
1V5REG_PCIE_SWITCHNODE	1V5REG_PCIE_SWITCHNODE - @m39_lib.M39	80C5
1V5REG_PCIE_UGATE	1V5REG_PCIE_UGATE - @m39_lib.M39	80D6
1V5REG_PCIE_VCC5	1V5REG_PCIE_VCC5 - @m39_lib.M39	80D7
1V6_REF	1V6_REF - @m39_lib.M39	79B3
1V8REG_DDR_BOOT	1V8REG_DDR_BOOT - @m39_lib.M39	79D6
1V8REG_DDR_BOOT_R	1V8REG_DDR_BOOT_R - @m39_lib.M39	79D5
1V8REG_DDR_COMP	1V8REG_DDR_COMP - @m39_lib.M39	79C6
1V8REG_DDR_COMP_R	1V8REG_DDR_COMP_R - @m39_lib.M39	79C5
1V8REG_DDR_FB	1V8REG_DDR_FB - @m39_lib.M39	79C5
1V8REG_DDR_FB_R	1V8REG_DDR_FB_R - @m39_lib.M39	79C3
1V8REG_DDR_FS_DIS	1V8REG_DDR_FS_DIS - @m39_lib.M39	79C7
1V8REG_DDR_GND	1V8REG_DDR_GND - @m39_lib.M39	79C7
1V8REG_DDR_LDO_DR	1V8REG_DDR_LDO_DR - @m39_lib.M39	79C7
1V8REG_DDR_LDO_FB	1V8REG_DDR_LDO_FB - @m39_lib.M39	79C7
1V8REG_DDR_LGATE	1V8REG_DDR_LGATE - @m39_lib.M39	79C6
1V8REG_DDR_PVCC5	1V8REG_DDR_PVCC5 - @m39_lib.M39	79D7
1V8REG_DDR_SNUB	1V8REG_DDR_SNUB - @m39_lib.M39	79C4
1V8REG_DDR_SWITCHNODE	1V8REG_DDR_SWITCHNODE - @m39_lib.M39	79C5
1V8REG_DDR_UGATE	1V8REG_DDR_UGATE - @m39_lib.M39	79D6
1V8REG_DDR_VCC5	1V8REG_DDR_VCC5 - @m39_lib.M39	79D7
1V8REG_GPU_BOOT	1V8REG_GPU_BOOT - @m39_lib.M39	78C6
1V8REG_GPU_BOOT_R	1V8REG_GPU_BOOT_R - @m39_lib.M39	78C5
1V8REG_GPU_COMP	1V8REG_GPU_COMP - @m39_lib.M39	78B6
1V8REG_GPU_COMP_R	1V8REG_GPU_COMP_R - @m39_lib.M39	78B5
1V8REG_GPU_FB	1V8REG_GPU_FB - @m39_lib.M39	78B5
1V8REG_GPU_FB_R	1V8REG_GPU_FB_R - @m39_lib.M39	78B3
1V8REG_GPU_FS_DIS	1V8REG_GPU_FS_DIS - @m39_lib.M39	78B7
1V8REG_GPU_GND	1V8REG_GPU_GND - @m39_lib.M39	78B7
1V8REG_GPU_LDO_DR	1V8REG_GPU_LDO_DR - @m39_lib.M39	78C7
1V8REG_GPU_LDO_FB	1V8REG_GPU_LDO_FB - @m39_lib.M39	78B7
1V8REG_GPU_LGATE	1V8REG_GPU_LGATE - @m39_lib.M39	78B6
1V8REG_GPU_PVCC5	1V8REG_GPU_PVCC5 - @m39_lib.M39	78C7
1V8REG_GPU_SNUB	1V8REG_GPU_SNUB - @m39_lib.M39	78B4
1V8REG_GPU_SWITCHNODE	1V8REG_GPU_SWITCHNODE - @m39_lib.M39	78B5
1V8REG_GPU_UGATE	1V8REG_GPU_UGATE - @m39_lib.M39	78C6
1V8REG_GPU_VCC5	1V8REG_GPU_VCC5 - @m39_lib.M39	78C7
2V5REG_ITH	2V5REG_ITH - @m39_lib.M39	77C4
2V5REG_ITH_RC	2V5REG_ITH_RC - @m39_lib.M39	77C4
2V5REG_MODE	2V5REG_MODE - @m39_lib.M39	77C5
2V5REG_RT	2V5REG_RT - @m39_lib.M39	77C5
2V5REG_SGND	2V5REG_SGND - @m39_lib.M39	77C4
2V5REG_SW	2V5REG_SW - @m39_lib.M39	77C4
2V5REG_VFB	2V5REG_VFB - @m39_lib.M39	77C4
5V_REG_IN	5V_REG_IN - @m39_lib.M39	68A4
=I2C_HD_TEMP_SCL	=I2C_HD_TEMP_SCL - @m39_lib.M39	59C1 66B6
	=I2C_ODD_TEMP_SCL - @m39_lib.M39	59C1 66B4
	=SMB_THRM_CLK - @m39_lib.M39	10C3 59C1
	SMB_B_S0_CLK - @m39_lib.M39	58B5 59C2 59D1
	SMB_GPU_NB_THRM_CLK - @m39_lib.M39	59B1 61C3
	SMB_B_S0_CLK - @m39_lib.M39	58B5 59C2 59D1
	=SMB_THRM_CLK - @m39_lib.M39	10C3 59C1
	=I2C_ODD_TEMP_SCL - @m39_lib.M39	59C1 66B4
=I2C_HD_TEMP_SDA	=I2C_HD_TEMP_SDA - @m39_lib.M39	59C1 66B6
	=I2C_ODD_TEMP_SDA - @m39_lib.M39	59C1 66B4
	=SMB_THRM_DATA - @m39_lib.M39	10C3 59C1
	SMB_B_S0_DATA - @m39_lib.M39	58B5 59C2 59D1
	SMB_GPU_NB_THRM_DATA - @m39_lib.M39	59B1 61C3
	SMB_B_S0_DATA - @m39_lib.M39	58B5 59C2 59D1
	=SMB_THRM_DATA - @m39_lib.M39	10C3 59C1
	=I2C_ODD_TEMP_SDA - @m39_lib.M39	59C1 66B4
=I2C_MEM_SCL	=I2C_MEM_SCL - @m39_lib.M39	27D6 28A6 29A6
	=SMB_AIRPORT_CLK - @m39_lib.M39	27D6 53B4
	SMB_CK410_CLK - @m39_lib.M39	27D6 33B6
	SMB_CLK - @m39_lib.M39	23D5 27B7 27D7
	SMB_CK410_CLK - @m39_lib.M39	27D6 33B6
	=SMB_AIRPORT_CLK - @m39_lib.M39	27D6 53B4
=I2C_MEM_SDA	=I2C_MEM_SDA - @m39_lib.M39	27D6 28A6 29A6
	=SMB_AIRPORT_DATA - @m39_lib.M39	27C6 53B4
	SMB_CK410_DATA - @m39_lib.M39	27D6 33B6
	SMB_DATA - @m39_lib.M39	23D5 27B7 27D7
	SMB_CK410_DATA - @m39_lib.M39	27D6 33B6
	=SMB_AIRPORT_DATA - @m39_lib.M39	27C6 53B4
=PNBB_S0_GPU	=PNBB_S0_GPU - @m39_lib.M39	86D2 88C6
	=PNVOUT_S0_GPUBBN_REG - @m39_lib.M39	85B1 88C6
	PNBB_S0_GPU - @m39_lib.M39	88C8
	=PNVOUT_S0_GPUBBN_REG - @m39_lib.M39	85B1 88C6
=PP0V9_S0_MEMVTT_LDO	=PP0V9_S0_MEMVTT_LDO - @m39_lib.M39	6D4 31B3
	=PP0V9_S0_MEM_TERM - @m39_lib.M39	6D4 30D4
	PP0V9_S0 - @m39_lib.M39	6D6 79A3
	=PP0V9_S0_MEM_TERM - @m39_lib.M39	6D4 30D4
=PP1V2_S0_GPU_VDDPLL	=PP1V2_S0_GPU_VDDPLL - @m39_lib.M39	88C6 91B8
	=PPVIO_S0_PCIE - @m39_lib.M39	84A2 88C6
	=PP1V2_S0_REG - @m39_lib.M39	77A1 88C6
	=PP1V2_S0_PCIE_GPU_PVDD - @m39_lib.M39	84C8 88D6
	=PP1V2_S0_PCIE_GPU_VDDR - @m39_lib.M39	84C8 88D6
	PP1V2_GPU_IO_S0 - @m39_lib.M39	88D8
	=PPVIO_S0_PCIE - @m39_lib.M39	84A2 88C6
	=PP1V2_S0_REG - @m39_lib.M39	77A1 88C6
	=PP1V2_S0_PCIE_GPU_VDDR - @m39_lib.M39	84C8 88D6
	=PP1V2_S0_PCIE_GPU_PVDD - @m39_lib.M39	84C8 88D6
=PP1V2_S3_ENET	=PP1V2_S3_ENET - @m39_lib.M39	41A8 41D6 42B5
	PP1V2_S3_ENET - @m39_lib.M39	42B5
=PP1V2_S3_LAN	=PP1V2_S3_LAN - @m39_lib.M39	6D3 42B8
	PP1V2_S3 - @m39_lib.M39	6D4 77B2
=PP1V8_S0_FB_VDD	=PP1V8_S0_FB_VDD - @m39_lib.M39	88B6 89D5 89D8 90D5 90D8
	=PP1V8_S0_FB_VDDQ - @m39_lib.M39	88B6 89D5 89D8 90D5 90D8
	=PP1V8R2V0_S0_FB_GPU - @m39_lib.M39	86B8 87A5 87A8 87B5 87B8 88B6
	PP1V8_S0 - @m39_lib.M39	78B2 88B6
	=PP1V8R3V3_S0_GPU_VDDR5 - @m39_lib.M39	88B6 91B7
	=PP1V8R3V3_S0_GPU_VDDR4 - @m39_lib.M39	88B6 91B7
	PP1V8_S0 - @m39_lib.M39	78B2 88B6
	PP1V8R2V0_S0_FB_GPU - @m39_lib.M39	88B8
	=PP1V8_S0_FB_VDDQ - @m39_lib.M39	88B6 89D5 89D8 90D5 90D8
	=PP1V8R3V3_S0_GPU_VDDR5 - @m39_lib.M39	88B6 91B7
	=PP1V8R3V3_S0_GPU_VDDR4 - @m39_lib.M39	88B6 91B7
	=PP1V8R2V0_S0_FB_GPU - @m39_lib.M39	86B8 87A5 87A8 87B5 87B8 88B6
=PP1V8_S3_MEM_NB	=PP1V8_S3_MEM_NB - @m39_lib.M39	6D3 6D3 14C2 16B6 19B8 19D7
	=PP1V8_S0_MEMVTT - @m39_lib.M39	6D3 31C7
	PP1V8_S3 - @m39_lib.M39	5D2 6D4 79C2
	=PP1V8_S3_MEM - @m39_lib.M39	5C4 6D3 28B2 28C8 28D3 28D6 29B2 29D3 29D6
	PP1V8_S3 - @m39_lib.M39	5D2 6D4 79C2
	=PP1V8_S3_MEM - @m39_lib.M39	5C4 6D3 28B2 28C8 28D3 28D6 29B2 29D3 29D6
	=PP1V8_S0_MEMVTT - @m39_lib.M39	6D3 31C7
=PP2V5_S0_NB_VCCA_3GBG	=PP2V5_S0_NB_VCCA_3GBG - @m39_lib.M39	6B4 17D6 19A8 19C7
	=PP2V5_S0_GPU - @m39_lib.M39	88B6 93C8
	PP2V5_S0 - @m39_lib.M39	6B6 77C3 88C8
	=PP2V5_S0_GPU_VDD25 - @m39_lib.M39	88B6 91C6
	=PP2V5_S0_GPU_VDDC_CT - @m39_lib.M39	88B6 91C6
	=PP2V5_S0_GPU_PVDD - @m39_lib.M39	88B6 91A8
	PP2V5_S0 - @m39_lib.M39	6B6 77C3 88C8
	=PP2V5_S0_GPU_VDDC_CT - @m39_lib.M39	88B6 91C6
	=PP2V5_S0_GPU_VDD25 - @m39_lib.M39	88B6 91C6
	=PP2V5_S0_GPU_PVDD - @m39_lib.M39	88B6 91A8
	=PP2V5_S0_GPU - @m39_lib.M39	88B6 93C8
=PP2V5_S3_ENET	=PP2V5_S3_ENET - @m39_lib.M39	41D5 41D6 42C4
	PP2V5_S3_ENET - @m39_lib.M39	42C4 43D8
=PP3V3_S0_NB	=PP3V3_S0_NB - @m39_lib.M39	6A4 14C7 14D6 19C7 20A4 20B4 20B4
	=PP3V3_DDC_DVI - @m39_lib.M39	88C6 97D2
	=PP3V3_DDC_LCD - @m39_lib.M39	88C6 94A7 94C7
	=PP3V3_GPU - @m39_lib.M39	88C6 94B3
	PP3V3_S0 - @m39_lib.M39	6A7 6B6 6D8 10D2 26B7 26C6 41D8 59D3 61C3 76D6 88C8
	=PP3V3_S0_GPUBBCTL - @m39_lib.M39	85A7 88C6
	=PP3V3_S0_GPUBBN - @m39_lib.M39	85B5 88C6
	=PP3V3_S0_GPU - @m39_lib.M39	85B3 88C6 91D2 93A1
	=PP3V3_S0_GPU_VDDR3 - @m39_lib.M39	88C6 88D3 91C6
	=PP3V3_S0_LCD - @m39_lib.M39	88C6 94D7
	=PP3V3_S0_GPUBBP - @m39_lib.M39	85B8 88C6
	=PP3V3_S0_2V5REG - @m39_lib.M39	6A4 77D6
	=PP3V3_S0_AIRPORT - @m39_lib.M39	6A4 53C2
	=PP3V3_S0_PCI - @m39_lib.M39	6A4 44D5
	=PP3V3_S0_AUDIO - @m39_lib.M39	6A4 68A6 68D7 72A6 72C8 72D5 73B8 73C2 74B5 74C5 74D5
	=PP3V3_S0_IMVP - @m39_lib.M39	6A4 75D8
	=PP3V3_S0_CK410 - @m39_lib.M39	6A4 33C8 33D3 33D8 34D4
	=PPSPD_S0_MEM - @m39_lib.M39	6A4 28A7 29A3 29A7
	=PP3V3_S0_TPM - @m39_lib.M39	6A4 67C7 67D4
	=PP3V3_S0_SB_3V3_1V5_VCCHDA - @m39_lib.M39	6A4 24C3 25C4
	=PP3V3_S0_ODD_TSENS - @m39_lib.M39	6A4 66B4
	=PP3V3_S0_HD_TSENS - @m39_lib.M39	6B4 66B5
	=PP3V3_S0_FAN - @m39_lib.M39	6B4 59A8 59B7 65B7 65C7 66C7
	=PP3V3_S0_PATA - @m39_lib.M39	6B4 38D3
	=PP3V3_S0_SB_PM - @m39_lib.M39	6B4 26D4
	=PP3V3_S0_SB_PCI - @m39_lib.M39	6B4 26D1
	=PP3V3_S0_SB_VCC3_3_IDE - @m39_lib.M39	6B4 24C3 25B3
	=PP3V3_S0_SB_VCC3_3_PCI - @m39_lib.M39	6B4 24B3 25A3
	=PP3V3_S0_SB_VCC3_3 - @m39_lib.M39	6B4 24B5 24B5 25B8 25C6
	=PP3V3_S0_NB_VCC_HV - @m39_lib.M39	6B4 17C6 19A8 19C7
	=PP3V3_S0_SB_GPIO - @m39_lib.M39	6B4 21C3 21D3 23B3 23D5
	=PP3V3_S0_SB_VCCLAN3_3 - @m39_lib.M39	6A4 24D3 25D3
	=PP3V3_S0_SB - @m39_lib.M39	6B4 22B5 25D8
	PP3V3_S0 - @m39_lib.M39	6A7 6B6 6D8 10D2 26B7 26C6 41D8 59D3 61C3 76D6 88C8
	=PPSPD_S0_MEM - @m39_lib.M39	6A4 28A7 29A3 29A7
	=PP3V3_S0_TPM - @m39_lib.M39	6A4 67C7 67D4
	=PP3V3_S0_SB_VCCLAN3_3 - @m39_lib.M39	6A4 24D3 25D3
	=PP3V3_S0_SB_VCC3_3_PCI - @m39_lib.M39	6B4 24B3 25A3
	=PP3V3_S0_SB_VCC3_3_IDE - @m39_lib.M39	6B4 24C3 25B3
	=PP3V3_S0_SB_VCC3_3 - @m39_lib.M39	6B4 24B5 24B5 25B8 25C6
	=PP3V3_S0_SB_PM - @m39_lib.M39	6B4 26D4
	=PP3V3_S0_SB_PCI - @m39_lib.M39	6B4 26D1
	=PP3V3_S0_SB_GPIO - @m39_lib.M39	6B4 21C3 21D3 23B3 23D5
	=PP3V3_S0_SB_3V3_1V5_VCCHDA - @m39_lib.M39	6A4 24C3 25C4
	=PP3V3_S0_SB - @m39_lib.M39	6B4 22B5 25D8
	=PP3V3_S0_PCI - @m39_lib.M39	6A4 44D5
	=PP3V3_S0_PATA - @m39_lib.M39	6B4 38D3
	=PP3V3_S0_ODD_TSENS - @m39_lib.M39	6A4 66B4
	=PP3V3_S0_NB_VCC_HV - @m39_lib.M39	6B4 17C6 19A8 19C7
	=PP3V3_S0_NB_TVDAC - @m39_lib.M39	6B4 19C7
	=PP3V3_S0_NB_PM - @m39_lib.M39	6B4
	=PP3V3_S0_LCD - @m39_lib.M39	88C6 94D7
	=PP3V3_S0_IMVP - @m39_lib.M39	6A4 75D8
	=PP3V3_S0_HD_TSENS - @m39_lib.M39	6B4 66B5
	=PP3V3_S0_GPU_CLOCKS - @m39_lib.M39	88C6
	=PP3V3_S0_GPUBBP - @m39_lib.M39	85B8 88C6
	=PP3V3_S0_GPUBBN - @m39_lib.M39	85B5 88C6
	=PP3V3_S0_GPUBBCTL - @m39_lib.M39	85A7 88C6
	=PP3V3_S0_GPU - @m39_lib.M39	85B3 88C6 91D2 93A1
	=PP3V3_S0_FAN - @m39_lib.M39	6B4 59A8 59B7 65B7 65C7 66C7
	=PP3V3_S0_CK410 - @m39_lib.M39	6A4 33C8 33D3 33D8 34D4
	=PP3V3_S0_AUDIO - @m39_lib.M39	6A4 68A6 68D7 72A6 72C8 72D5 73B8 73C2 74B5 74C5 74D5
	=PP3V3_S0_AIRPORT - @m39_lib.M39	6A4 53C2
	=PP3V3_S0_2V5REG - @m39_lib.M39	6A4 77D6
	=PP3V3_GPU - @m39_lib.M39	88C6 94B3
	=PP3V3_DDC_LCD - @m39_lib.M39	88C6 94A7 94C7
	=PP3V3_DDC_DVI - @m39_lib.M39	88C6 97D2
=PP3V3_S3_1V2REG	=PP3V3_S3_1V2REG - @m39_lib.M39	6D3 77B7
	=PP3V3_S3_USB - @m39_lib.M39	6C3 49C5
	=PP3V3_S3_VGASYNC - @m39_lib.M39	6C3 97A4 97B4
	PP3V3_S3 - @m39_lib.M39	6A7 6D4 53C4 59C8 59D3 83B3
	=PP3V3_S3_BT - @m39_lib.M39	6D3 47B3
	=PP3V3_S3_TPM - @m39_lib.M39	6D3 67C2
	=PP3V3_S3_ENET - @m39_lib.M39	6D3 41A5 41B3 41C3 41D6 41D8 42D3 42D8 43D2
	PP3V3_S3 - @m39_lib.M39	6A7 6D4 53C4 59C8 59D3 83B3
	=PP3V3_S3_VGASYNC - @m39_lib.M39	6C3 97A4 97B4
	=PP3V3_S3_USB - @m39_lib.M39	6C3 49C5
	=PP3V3_S3_TPM - @m39_lib.M39	6D3 67C2
	=PP3V3_S3_ENET - @m39_lib.M39	6D3 41A5 41B3 41C3 41D6 41D8 42D3 42D8 43D2
	=PP3V3_S3_BT - @m39_lib.M39	6D3 47B3
=PP3V3_S5_DEBUG	=PP3V3_S5_DEBUG - @m39_lib.M39	6D1 60D6
	=PP3V3_S5_ROM - @m39_lib.M39	6D1 63D4
	PP3V3_S5 - @m39_lib.M39	5D2 6C8 6C8 6D2 6D8 26C1 26C4 26C4 59A8 65B7 65D7 66D7 76D2 76D4 77B8 77C7 77C8 77C8 77D8 79A3 79A5 79B3 80A5 80B3 81A5 81A5 83C3
	=PP3V3_S5_SMC - @m39_lib.M39	6D1 58C2 58D3 58D4 59A4 59A5 59C4 59D3 59D8
	=PP3V3_S5_FW - @m39_lib.M39	6D1 44A6 44B2 44B7 44D5 44D7 45D6 46A8
	=PP3V3_S5_SB_IO - @m39_lib.M39	6D1 22C6 27C6
	=PP3V3_S5_SB_3V3_1V5_VCCSUSHDA - @m39_lib.M39	6D1 24C3
	=PP3V3_S5_SB_VCCSUS3_3_USB - @m39_lib.M39	6D1 24B3 25D1
	=PP3V3_S5_SB_VCCSUS3_3 - @m39_lib.M39	6D1 24A5 24B3 25B6 25D1
	=PP3V3_S5_SB_PM - @m39_lib.M39	6D1 11B5 23D1
	=PP3V3_S5_SB_USB - @m39_lib.M39	6D1 22D8
	=PP3V3_S5_SB - @m39_lib.M39	6D1 23A7 23B3 23B7 23D4 23D8 25C8 26D8
	PP3V3_S5 - @m39_lib.M39	5D2 6C8 6C8 6D2 6D8 26C1 26C4 26C4 59A8 65B7 65D7 66D7 76D2 76D4 77B8 77C7 77C8 77C8 77D8 79A3 79A5 79B3 80A5 80B3 81A5 81A5 83C3
	=PP3V3_S5_SMC - @m39_lib.M39	6D1 58C2 58D3 58D4 59A4 59A5 59C4 59D3 59D8
	=PP3V3_S5_SB_VCCSUS3_3_USB - @m39_lib.M39	6D1 24B3 25D1
	=PP3V3_S5_SB_VCCSUS3_3 - @m39_lib.M39	6D1 24A5 24B3 25B6 25D1
	=PP3V3_S5_SB_USB - @m39_lib.M39	6D1 22D8
	=PP3V3_S5_SB_PM - @m39_lib.M39	6D1 11B5 23D1
	=PP3V3_S5_SB_IO - @m39_lib.M39	6D1 22C6 27C6
	=PP3V3_S5_SB_3V3_1V5_VCCSUSHDA - @m39_lib.M39	6D1 24C3
	=PP3V3_S5_SB - @m39_lib.M39	6D1 23A7 23B3 23B7 23D4 23D8 25C8 26D8
	=PP3V3_S5_ROM - @m39_lib.M39	6D1 63D4
	=PP3V3_S5_FW - @m39_lib.M39	6D1 44A6 44B2 44B7 44D5 44D7 45D6 46A8
=PP5V_S0_AUDIO	=PP5V_S0_AUDIO - @m39_lib.M39	6A4 68A6
	PP5V_S0_AUDIO - @m39_lib.M39	6A5
=PP5V_S0_DEBUG	=PP5V_S0_DEBUG - @m39_lib.M39	6A4 60C6
	=PP5V_S0_DVI_DDC - @m39_lib.M39	88A6 97D6
	=PP5V_S0_GPUISENS - @m39_lib.M39	85D2 88A6
	PP5V_S0 - @m39_lib.M39	6A6 6D8 75D7 88B8 97D3
	=PP5V_S0_GPUBBCTL - @m39_lib.M39	85A6 88B6
	=PP5V_S0_SB - @m39_lib.M39	6A4 25D8
	=PP5V_S0_PATA - @m39_lib.M39	6A4 38C4 38D3
	PP5V_S0 - @m39_lib.M39	6A6 6D8 75D7 88B8 97D3
	=PP5V_S0_SB - @m39_lib.M39	6A4 25D8
	=PP5V_S0_PATA - @m39_lib.M39	6A4 38C4 38D3
	=PP5V_S0_GPUISENS - @m39_lib.M39	85D2 88A6
	=PP5V_S0_GPUBBCTL - @m39_lib.M39	85A6 88B6
	=PP5V_S0_DVI_DDC - @m39_lib.M39	88A6 97D6
=PP5V_S0_GPUVCORE	=PP5V_S0_GPUVCORE - @m39_lib.M39	85D7 88D6
	GPUVCORE_VCC - @m39_lib.M39	88D6
=PP5V_S0_MEMVTT	=PP5V_S0_MEMVTT - @m39_lib.M39	6C3 31C6
	PP5V_S3 - @m39_lib.M39	6C4 59D6 83C3
	=PP5V_S3_BNDI - @m39_lib.M39	6C3 47D4
	=PP5V_S3_USB - @m39_lib.M39	6C3 47C8
	PP5V_S3 - @m39_lib.M39	6C4 59D6 83C3
	=PP5V_S3_USB - @m39_lib.M39	6C3 47C8
	=PP5V_S3_BNDI - @m39_lib.M39	6C3 47D4
=PP5V_S5_SB	=PP5V_S5_SB - @m39_lib.M39	6D1 25C8
	PP5V_S5 - @m39_lib.M39	5D2 6A8 6D2 6D7 59A5 79B3 79B3 80B3 81B3 83C3
=PP12V_GPU	=PP12V_GPU - @m39_lib.M39	88B6 94C8
	PP12V_S0 - @m39_lib.M39	6A6 6D8 76B8 88B8
	=PP12V_S0_FAN - @m39_lib.M39	6A4 65B6 65D7 66D6
	PP12V_S0 - @m39_lib.M39	6A6 6D8 76B8 88B8
	=PP12V_S0_FAN - @m39_lib.M39	6A4 65B6 65D7 66D6
=PP12V_S0_AUDIO_SPKRAMP	=PP12V_S0_AUDIO_SPKRAMP - @m39_lib.M39	6A4 72D8
	PP12V_S0_AUDIO_SPKRAMP - @m39_lib.M39	6A5
=PP12V_S5_CPU	=PP12V_S5_CPU - @m39_lib.M39	6C1 76D8
	=PPVIN_S0_GPUVCORE - @m39_lib.M39	85D7 88B6
	PP12V_S5 - @m39_lib.M39	5D2 6C2 6D7 78C7 79D7 80D7 81D7 83C5 83C5 88B8
	=PP12V_S5_FW - @m39_lib.M39	6C1 46D7
	PP12V_S5 - @m39_lib.M39	5D2 6C2 6D7 78C7 79D7 80D7 81D7 83C5 83C5 88B8
	=PPVIN_S0_GPUVCORE - @m39_lib.M39	85D7 88B6
	=PP12V_S5_FW - @m39_lib.M39	6C1 46D7
=PP12V_S5_FW_PHY	=PP12V_S5_FW_PHY - @m39_lib.M39	44C2 46D5
	PP12V_FW - @m39_lib.M39	46D6
=PPBB_S0_GPU	=PPBB_S0_GPU - @m39_lib.M39	86D6 88C6
	=PPVOUT_S0_GPUBBP_LDO - @m39_lib.M39	85B5 88C6
	PPBB_S0_GPU - @m39_lib.M39	88C8
	=PPVOUT_S0_GPUBBP_LDO - @m39_lib.M39	85B5 88C6
=PPVCORE_S0_CPU	=PPVCORE_S0_CPU - @m39_lib.M39	6D4 8B6 8D7 8D8 9B8 76B5
	PPVCORE_CPU - @m39_lib.M39	5D2 6D6 75A4 75D1 76B4
=PPVCORE_S0_GPU	=PPVCORE_S0_GPU - @m39_lib.M39	76B4 86D8 88D6 91A7
	=PPVCORE_S0_GPU_BBP - @m39_lib.M39	85B7 88D6
	PP1V0R1V2_S0_GPU - @m39_lib.M39	59B4 88D8
	=PPVCORE_S0_GPU_REG - @m39_lib.M39	85C1 88D6
	PP1V0R1V2_S0_GPU - @m39_lib.M39	59B4 88D8
	=PPVCORE_S0_GPU_REG - @m39_lib.M39	85C1 88D6
	=PPVCORE_S0_GPU_BBP - @m39_lib.M39	85B7 88D6
ACZ_BITCLK	ACZ_BITCLK - @m39_lib.M39	21C7 68D7
ACZ_RST_L	ACZ_RST_L - @m39_lib.M39	21C7 68C7
ACZ_SDATAIN<0>	ACZ_SDATAIN<0> - @m39_lib.M39	21C7 68D7
ACZ_SDATAIN_CHIP	ACZ_SDATAIN_CHIP - @m39_lib.M39	68C6
ACZ_SDATAOUT	ACZ_SDATAOUT - @m39_lib.M39	21C7 68D7
ACZ_SYNC	ACZ_SYNC - @m39_lib.M39	21C7 68D7
AIRPORT_CLK100M_PCIE_N	AIRPORT_CLK100M_PCIE_N - @m39_lib.M39	34B4 34C2 53C6
AIRPORT_CLK100M_PCIE_P	AIRPORT_CLK100M_PCIE_P - @m39_lib.M39	34B4 34C2 53C6
AIRPORT_CONN_CLK	AIRPORT_CONN_CLK - @m39_lib.M39	53B5
AIRPORT_CONN_DATA	AIRPORT_CONN_DATA - @m39_lib.M39	53B5
AIRPORT_RST_L	AIRPORT_RST_L - @m39_lib.M39	6A7 53C5
AIRPORT_WAKE_L	AIRPORT_WAKE_L - @m39_lib.M39	53C6
ALL_SYS_PWRGD	ALL_SYS_PWRGD - @m39_lib.M39	26D5 58D7 77B6
ALS_GAIN	ALS_GAIN - @m39_lib.M39	58B5 59C6
	NC_ALS_GAIN - @m39_lib.M39	59C5
ALS_LEFT	ALS_LEFT - @m39_lib.M39	58A7 59D5
	TP_ALS_LEFT - @m39_lib.M39	59D3
ALS_RIGHT	ALS_RIGHT - @m39_lib.M39	58A7 59D5
	TP_ALS_RIGHT - @m39_lib.M39	59D3
ATI_DVPCLK	ATI_DVPCLK - @m39_lib.M39	91C3 95A6
	TP_ATI_DVPCLK - @m39_lib.M39	95A8
ATI_DVPCNTL<0>	ATI_DVPCNTL<0> - @m39_lib.M39	91C3 95A6
ATI_DVPCNTL<1>	ATI_DVPCNTL<1> - @m39_lib.M39	91B3 95A6
ATI_DVPCNTL<2>	ATI_DVPCNTL<2> - @m39_lib.M39	91B3 95A6
ATI_DVPDATA<0>	ATI_DVPDATA<0> - @m39_lib.M39	91B3 95B6
ATI_DVPDATA<1>	ATI_DVPDATA<1> - @m39_lib.M39	91B3 95B6
ATI_DVPDATA<2>	ATI_DVPDATA<2> - @m39_lib.M39	91B3 95B6
ATI_DVPDATA<3>	ATI_DVPDATA<3> - @m39_lib.M39	91B3 95B6
ATI_DVPDATA<4>	ATI_DVPDATA<4> - @m39_lib.M39	91B3 95B6
ATI_DVPDATA<5>	ATI_DVPDATA<5> - @m39_lib.M39	91B3 95B6
ATI_DVPDATA<6>	ATI_DVPDATA<6> - @m39_lib.M39	91B3 95B6
ATI_DVPDATA<7>	ATI_DVPDATA<7> - @m39_lib.M39	91B3 95B6
ATI_DVPDATA<8>	ATI_DVPDATA<8> - @m39_lib.M39	91B3 95B6
ATI_DVPDATA<9>	ATI_DVPDATA<9> - @m39_lib.M39	91B3 95B6
ATI_DVPDATA<10>	ATI_DVPDATA<10> - @m39_lib.M39	91B3 95B6
ATI_DVPDATA<11>	ATI_DVPDATA<11> - @m39_lib.M39	91B3 95B6
ATI_DVPDATA<12>	ATI_DVPDATA<12> - @m39_lib.M39	91B3 95B6
ATI_DVPDATA<13>	ATI_DVPDATA<13> - @m39_lib.M39	91B3 95C6
ATI_DVPDATA<14>	ATI_DVPDATA<14> - @m39_lib.M39	91B3 95C6
ATI_DVPDATA<15>	ATI_DVPDATA<15> - @m39_lib.M39	91B3 95C6
ATI_DVPDATA<16>	ATI_DVPDATA<16> - @m39_lib.M39	91B3 95C6
ATI_DVPDATA<17>	ATI_DVPDATA<17> - @m39_lib.M39	91B3 95C6
ATI_DVPDATA<18>	ATI_DVPDATA<18> - @m39_lib.M39	91B3 95C6
ATI_DVPDATA<19>	ATI_DVPDATA<19> - @m39_lib.M39	91B3 95C6
ATI_DVPDATA<20>	ATI_DVPDATA<20> - @m39_lib.M39	91B3 95C6
ATI_DVPDATA<21>	ATI_DVPDATA<21> - @m39_lib.M39	91B3 95C6
ATI_DVPDATA<22>	ATI_DVPDATA<22> - @m39_lib.M39	91A3 95C6
ATI_DVPDATA<23>	ATI_DVPDATA<23> - @m39_lib.M39	91A3 95C6
ATI_R2SET	ATI_R2SET - @m39_lib.M39	93A8 93B5
ATI_RSET	ATI_RSET - @m39_lib.M39	93A8 93B5
ATI_TDIODE_N	ATI_TDIODE_N - @m39_lib.M39	61C5 91A3
ATI_TDIODE_P	ATI_TDIODE_P - @m39_lib.M39	61C5 91A3
ATI_TESTEN	ATI_TESTEN - @m39_lib.M39	91A3
ATI_VREFG	ATI_VREFG - @m39_lib.M39	91D3
AUDLINDETH	AUDLINDETH - @m39_lib.M39	74C4
AUDSAMPCPN	AUDSAMPCPN - @m39_lib.M39	72C4
AUDSAMPCPP	AUDSAMPCPP - @m39_lib.M39	72C4
AUDSAMPINLN	AUDSAMPINLN - @m39_lib.M39	72D6
AUDSAMPINLP	AUDSAMPINLP - @m39_lib.M39	72C6
AUDSAMPINRN	AUDSAMPINRN - @m39_lib.M39	72C6
AUDSAMPINRP	AUDSAMPINRP - @m39_lib.M39	72C6
AUDSAMPOURTP	AUDSAMPOURTP - @m39_lib.M39	72C4
AUDSAMPOUTLN	AUDSAMPOUTLN - @m39_lib.M39	72C4
AUDSAMPOUTLP	AUDSAMPOUTLP - @m39_lib.M39	72C4
AUDSAMPOUTRN	AUDSAMPOUTRN - @m39_lib.M39	72C4
AUD_4V5_SHDN_L	AUD_4V5_SHDN_L - @m39_lib.M39	68A4
AUD_ANALOG_FILT_1	AUD_ANALOG_FILT_1 - @m39_lib.M39	68C4
AUD_ANALOG_FILT_2	AUD_ANALOG_FILT_2 - @m39_lib.M39	68C4
AUD_BI_PORT_A_L	AUD_BI_PORT_A_L - @m39_lib.M39	68C1 74B8
AUD_BI_PORT_A_R	AUD_BI_PORT_A_R - @m39_lib.M39	68C1 74B8
AUD_BI_PORT_B_L	AUD_BI_PORT_B_L - @m39_lib.M39	68B2 68C1 74A3
	AUD_BI_PORT_B_R - @m39_lib.M39	68B1 68C1 74B6
AUD_BI_PORT_C_L	AUD_BI_PORT_C_L - @m39_lib.M39	68C7 72D8
AUD_BI_PORT_C_R	AUD_BI_PORT_C_R - @m39_lib.M39	68C7 72C8
AUD_BI_PORT_D_L	AUD_BI_PORT_D_L - @m39_lib.M39	68C7 74B6
AUD_BI_PORT_D_R	AUD_BI_PORT_D_R - @m39_lib.M39	68C7 74B6
AUD_BI_PORT_E_L	AUD_BI_PORT_E_L - @m39_lib.M39	68C1 74B6
AUD_BI_PORT_E_R	AUD_BI_PORT_E_R - @m39_lib.M39	68C1 74B6
AUD_BI_PORT_F_L	AUD_BI_PORT_F_L - @m39_lib.M39	68C1 74C8
AUD_BI_PORT_F_R	AUD_BI_PORT_F_R - @m39_lib.M39	68C1 74C8
AUD_BYPASS	AUD_BYPASS - @m39_lib.M39	68C4
AUD_DEBOUNCE	AUD_DEBOUNCE - @m39_lib.M39	72B7
AUD_GPIO_0	AUD_GPIO_0 - @m39_lib.M39	68B6 68C7 74A6
AUD_GPIO_0_A	AUD_GPIO_0_A - @m39_lib.M39	68B8 72B8
AUD_GPIO_1	AUD_GPIO_1 - @m39_lib.M39	68A6 68C7 74A6
AUD_GPIO_1_A	AUD_GPIO_1_A - @m39_lib.M39	68A8 73C2
AUD_GPIO_2	AUD_GPIO_2 - @m39_lib.M39	68C7 74A6

www.teknisi-indonesia.com

AUD_LI_DET_EMI	AUD_LI_DET_EMI - @m39_lib.M39	73D7
AUD_LI_DET_H	AUD_LI_DET_H - @m39_lib.M39	73D4 74C5
AUD_LI_DET_JACK	AUD_LI_DET_JACK - @m39_lib.M39	73D8
AUD_LI_GND_EMI	AUD_LI_GND_EMI - @m39_lib.M39	73C7
AUD_LI_GND_JACK	AUD_LI_GND_JACK - @m39_lib.M39	73D8
AUD_LI_L_EMI	AUD_LI_L_EMI - @m39_lib.M39	73D7
AUD_LI_L_JACK	AUD_LI_L_JACK - @m39_lib.M39	73D8
AUD_LI_R_EMI	AUD_LI_R_EMI - @m39_lib.M39	73D7
AUD_LI_R_JACK	AUD_LI_R_JACK - @m39_lib.M39	73D8
AUD_LO_DET1	AUD_LO_DET1 - @m39_lib.M39	73B8 74A5
AUD_LO_DET1_1	AUD_LO_DET1_1 - @m39_lib.M39	74A4 74B2
AUD_LO_DET1_EMI	AUD_LO_DET1_EMI - @m39_lib.M39	73B7
AUD_LO_DET1_INV	AUD_LO_DET1_INV - @m39_lib.M39	74B3
AUD_LO_DET1_JACK	AUD_LO_DET1_JACK - @m39_lib.M39	73B4
AUD_LO_DET2	AUD_LO_DET2 - @m39_lib.M39	73B8 74B5
AUD_LO_DET2_1	AUD_LO_DET2_1 - @m39_lib.M39	74B4
AUD_LO_DET2_EMI	AUD_LO_DET2_EMI - @m39_lib.M39	73B7
AUD_LO_DET2_JACK	AUD_LO_DET2_JACK - @m39_lib.M39	73B4
AUD_LO_GND_EMI	AUD_LO_GND_EMI - @m39_lib.M39	73A7
AUD_LO_GND_JACK	AUD_LO_GND_JACK - @m39_lib.M39	73B4
AUD_LO_L_EMI	AUD_LO_L_EMI - @m39_lib.M39	73B7
AUD_LO_L_JACK	AUD_LO_L_JACK - @m39_lib.M39	73B4
AUD_LO_R_EMI	AUD_LO_R_EMI - @m39_lib.M39	73A7
AUD_LO_R_JACK	AUD_LO_R_JACK - @m39_lib.M39	73B4
AUD_MAX9714_CHOLD	AUD_MAX9714_CHOLD - @m39_lib.M39	72C4
AUD_MAX9714_VREG	AUD_MAX9714_VREG - @m39_lib.M39	72C5
AUD_MIC_IN_N	AUD_MIC_IN_N - @m39_lib.M39	73C6 74A6
AUD_MIC_IN_N_CONN	AUD_MIC_IN_N_CONN - @m39_lib.M39	47C2 73C4
AUD_MIC_IN_N_EMI	AUD_MIC_IN_N_EMI - @m39_lib.M39	73C5
AUD_MIC_IN_P	AUD_MIC_IN_P - @m39_lib.M39	73C6 74A6
AUD_MIC_IN_P_CONN	AUD_MIC_IN_P_CONN - @m39_lib.M39	47C2 73C4
AUD_MIC_IN_P_EMI	AUD_MIC_IN_P_EMI - @m39_lib.M39	73C5
AUD_MIC_P1	AUD_MIC_P1 - @m39_lib.M39	74A4
AUD_PORT_A_DET_L	AUD_PORT_A_DET_L - @m39_lib.M39	74B2
AUD_PORT_A_L	AUD_PORT_A_L - @m39_lib.M39	73B8 74B5
AUD_PORT_A_L1	AUD_PORT_A_L1 - @m39_lib.M39	74B7
AUD_PORT_A_R	AUD_PORT_A_R - @m39_lib.M39	73A8 74B5
AUD_PORT_A_R1	AUD_PORT_A_R1 - @m39_lib.M39	74B7
AUD_PORT_E_DET_L	AUD_PORT_E_DET_L - @m39_lib.M39	74B1
AUD_PORT_F_L	AUD_PORT_F_L - @m39_lib.M39	73D4 74C5
AUD_PORT_F_L1	AUD_PORT_F_L1 - @m39_lib.M39	74C7
AUD_PORT_F_R	AUD_PORT_F_R - @m39_lib.M39	73D4 74C5
AUD_PORT_F_R1	AUD_PORT_F_R1 - @m39_lib.M39	74C7
AUD_SAMP_FS1	AUD_SAMP_FS1 - @m39_lib.M39	72A6 72C5
AUD_SAMP_FS2	AUD_SAMP_FS2 - @m39_lib.M39	72A6 72C5
AUD_SAMP_G1	AUD_SAMP_G1 - @m39_lib.M39	72A6 72C5
AUD_SAMP_G2	AUD_SAMP_G2 - @m39_lib.M39	72A6 72C5
AUD_SAMP_INL_N	AUD_SAMP_INL_N - @m39_lib.M39	72C5
AUD_SAMP_INL_P	AUD_SAMP_INL_P - @m39_lib.M39	72C5
AUD_SAMP_INR_N	AUD_SAMP_INR_N - @m39_lib.M39	72C5
AUD_SAMP_INR_P	AUD_SAMP_INR_P - @m39_lib.M39	72C5
AUD_SAMP_SHDN_L	AUD_SAMP_SHDN_L - @m39_lib.M39	72C5
AUD_SENSE_A	AUD_SENSE_A - @m39_lib.M39	68C1 74C5 74D7
AUD_SENSE_B	AUD_SENSE_B - @m39_lib.M39	68C1 74C5 74D5 74D7
AUD_SPDIF_GND	AUD_SPDIF_GND - @m39_lib.M39	73A3
AUD_SPDIF_IN	AUD_SPDIF_IN - @m39_lib.M39	68C1 74B6
AUD_SPDIF_OUT	AUD_SPDIF_OUT - @m39_lib.M39	68D1 73B8
AUD_SPDIF_OUT_CHIP	AUD_SPDIF_OUT_CHIP - @m39_lib.M39	68D4
AUD_SPDIF_OUT_EMI	AUD_SPDIF_OUT_EMI - @m39_lib.M39	73B7
AUD_SPDIF_OUT_JACK	AUD_SPDIF_OUT_JACK - @m39_lib.M39	73B5
AUD_SPKR_OUTL_N	AUD_SPKR_OUTL_N - @m39_lib.M39	72C1 73D3
AUD_SPKR_OUTL_P	AUD_SPKR_OUTL_P - @m39_lib.M39	72C1 73D3
AUD_SPKR_OUTR_N	AUD_SPKR_OUTR_N - @m39_lib.M39	72C1 73D3
AUD_SPKR_OUTR_P	AUD_SPKR_OUTR_P - @m39_lib.M39	72C1 73D3
AUD_TYPE_DET_EN	AUD_TYPE_DET_EN - @m39_lib.M39	74B3
AUD_VREF_FILT	AUD_VREF_FILT - @m39_lib.M39	68C4
AUD_VREF_PORT_B	AUD_VREF_PORT_B - @m39_lib.M39	68C1 74A3
BAL_IN_COM	BAL_IN_COM - @m39_lib.M39	68C7 74A7
BAL_IN_L	BAL_IN_L - @m39_lib.M39	68C7 74A7
BAL_IN_R	BAL_IN_R - @m39_lib.M39	68C7 74A7
BAT_1	BAT_1 - @m39_lib.M39	26C8
BAT_2	BAT_2 - @m39_lib.M39	26C8
BEEP	BEEP - @m39_lib.M39	68C6
BIOS_REC	BIOS_REC - @m39_lib.M39	23A6 23C5
BOOT_LPC_SPI_L	BOOT_LPC_SPI_L - @m39_lib.M39	22B3 58C7 60C6
C8509_P1	C8509_P1 - @m39_lib.M39	85C5
CEN	CEN - @m39_lib.M39	68B5 74B6
CK410_27M_NONSPREAD	CK410_27M_NONSPREAD - @m39_lib.M39	34A4 92C7
CK410_27M_SPREAD	CK410_27M_SPREAD - @m39_lib.M39	34A4 92C5
	GPU_GPIO_16 - @m39_lib.M39	91C3 92C3
CK410_CLK14P3M_TIMER	CK410_CLK14P3M_TIMER - @m39_lib.M39	33A4 34D6
CK410_CPU0_N	CK410_CPU0_N - @m39_lib.M39	33C4 34B6
CK410_CPU0_P	CK410_CPU0_P - @m39_lib.M39	33C4 34B6
CK410_CPU1_N	CK410_CPU1_N - @m39_lib.M39	33C4 34B6
CK410_CPU1_P	CK410_CPU1_P - @m39_lib.M39	33C4 34B6
CK410_CPU2_ITP_SRC10_N	CK410_CPU2_ITP_SRC10_N - @m39_lib.M39	33C4 34B6
CK410_CPU2_ITP_SRC10_P	CK410_CPU2_ITP_SRC10_P - @m39_lib.M39	33C4 34B6
CK410_DOT96_27M_NONSPREAD_P	CK410_DOT96_27M_NONSPREAD_P - @m39_lib.M39	33A4 34A6
CK410_DOT96_27M_SPREAD_N	CK410_DOT96_27M_SPREAD_N - @m39_lib.M39	33A4 34A6
CK410_FSA	CK410_FSA - @m39_lib.M39	34B8 34C4
CK410_FSB_TEST_MODE	CK410_FSB_TEST_MODE - @m39_lib.M39	33C6 34A8
CK410_FSC	CK410_FSC - @m39_lib.M39	34A8 34D4
CK410_IREF	CK410_IREF - @m39_lib.M39	33B6
CK410_LVDS_N	CK410_LVDS_N - @m39_lib.M39	33B4 34A6
	TP_CK410_LVDS_N - @m39_lib.M39	34A4
CK410_LVDS_P	CK410_LVDS_P - @m39_lib.M39	33B4 34A6
	TP_CK410_LVDS_P - @m39_lib.M39	34A4
CK410_PCI1_CLK	CK410_PCI1_CLK - @m39_lib.M39	33B6 34C6
CK410_PCI2_CLK	CK410_PCI2_CLK - @m39_lib.M39	33B6 34C6
CK410_PCI3_CLK	CK410_PCI3_CLK - @m39_lib.M39	33B6 34C6
CK410_PCI4_CLK	CK410_PCI4_CLK - @m39_lib.M39	33B6 34C6
CK410_PCI5_FCTSEL1	CK410_PCI5_FCTSEL1 - @m39_lib.M39	33B6 34D6
CK410_PCIF0_CLK	CK410_PCIF0_CLK - @m39_lib.M39	33B8 34B6
CK410_PCIF1_ITP_EN	CK410_PCIF1_ITP_EN - @m39_lib.M39	33B8 34B6
CK410_PD_VTT_PWRGD_L	CK410_PD_VTT_PWRGD_L - @m39_lib.M39	26A8 33A4
	VR_PWRGD_CK410_L - @m39_lib.M39	26A7 75C6
CK410_REF1_FCTSEL0	CK410_REF1_FCTSEL0 - @m39_lib.M39	33A4 34C6
CK410_SRC1_N	CK410_SRC1_N - @m39_lib.M39	33B4 34A6
CK410_SRC1_P	CK410_SRC1_P - @m39_lib.M39	33B4 34A6
CK410_SRC2_N	CK410_SRC2_N - @m39_lib.M39	33B4 34A6
CK410_SRC2_P	CK410_SRC2_P - @m39_lib.M39	33B4 34A6
CK410_SRC3_N	CK410_SRC3_N - @m39_lib.M39	33B4 34D3
CK410_SRC3_P	CK410_SRC3_P - @m39_lib.M39	33B4 34D3
CK410_SRC4_N	CK410_SRC4_N - @m39_lib.M39	33B4 34B6
CK410_SRC4_P	CK410_SRC4_P - @m39_lib.M39	33B4 34B6
CK410_SRC5_N	CK410_SRC5_N - @m39_lib.M39	33B4 34B6
CK410_SRC5_P	CK410_SRC5_P - @m39_lib.M39	33B4 34B6
CK410_SRC6_N	CK410_SRC6_N - @m39_lib.M39	33B4 34B6
CK410_SRC6_P	CK410_SRC6_P - @m39_lib.M39	33B4 34B6
CK410_SRC7_N	CK410_SRC7_N - @m39_lib.M39	33B4 34D3

CK410_SRC7_P	CK410_SRC7_P - @m39_lib.M39	33B4 34D3
CK410_SRC8_N	CK410_SRC8_N - @m39_lib.M39	33A4 34A6
CK410_SRC8_P	CK410_SRC8_P - @m39_lib.M39	33A4 34A6
CK410_SRC_CLKREQ1_L	CK410_SRC_CLKREQ1_L - @m39_lib.M39	33B4 34D8
CK410_SRC_CLKREQ3_L	CK410_SRC_CLKREQ3_L - @m39_lib.M39	33B4 34D8
CK410_SRC_CLKREQ6_L	CK410_SRC_CLKREQ6_L - @m39_lib.M39	33B4 53C6
CK410_SRC_CLKREQ8_L	CK410_SRC_CLKREQ8_L - @m39_lib.M39	33A4 34D8
CK410_USB48_FSA	CK410_USB48_FSA - @m39_lib.M39	33A4 34C6
CK410_XTAL_IN	CK410_XTAL_IN - @m39_lib.M39	33C6
CK410_XTAL_OUT	CK410_XTAL_OUT - @m39_lib.M39	33C6
CLK_NB_OE_L	CLK_NB_OE_L - @m39_lib.M39	14B6 33B4
CPUVCORE_ISENSE_CAL	CPUVCORE_ISENSE_CAL - @m39_lib.M39	76A5
CPU_A20M_L	CPU_A20M_L - @m39_lib.M39	5C8 7C7 21C4
CPU_BSEL<0>	CPU_BSEL<0> - @m39_lib.M39	7B4 34B8
CPU_BSEL<1>	CPU_BSEL<1> - @m39_lib.M39	7B4 34A8
CPU_BSEL<2>	CPU_BSEL<2> - @m39_lib.M39	7B4 34A8
CPU_COMP<0>	CPU_COMP<0> - @m39_lib.M39	7B2
CPU_COMP<1>	CPU_COMP<1> - @m39_lib.M39	7B2
CPU_COMP<2>	CPU_COMP<2> - @m39_lib.M39	7B2
CPU_COMP<3>	CPU_COMP<3> - @m39_lib.M39	7B2
CPU_DCIN_SENSE	CPU_DCIN_SENSE - @m39_lib.M39	76D7
CPU_DPRSTP_L	CPU_DPRSTP_L - @m39_lib.M39	7B3 21C4 75C6
CPU_DPSLP_L	CPU_DPSLP_L - @m39_lib.M39	7B3 21C4
CPU_FERR_L	CPU_FERR_L - @m39_lib.M39	7C7 21C2
CPU_GTLREF	CPU_GTLREF - @m39_lib.M39	5D4 7B4
CPU_HS_ZH607	CPU_HS_ZH607 - @m39_lib.M39	9D4
CPU_HS_ZH608	CPU_HS_ZH608 - @m39_lib.M39	9D3 66A4 66A6 66B4 66B6
CPU_HS_ZH609	CPU_HS_ZH609 - @m39_lib.M39	9D3
CPU_HS_ZH610	CPU_HS_ZH610 - @m39_lib.M39	9D2
CPU_IGNNE_L	CPU_IGNNE_L - @m39_lib.M39	5C8 7C7 21C4
CPU_INIT_L	CPU_INIT_L - @m39_lib.M39	5C8 7D6 21C4
CPU_INTR	CPU_INTR - @m39_lib.M39	5C8 7C7 21C4
CPU_ISENSE_OUT_R	CPU_ISENSE_OUT_R - @m39_lib.M39	76D3
CPU_ISENSE_R_NEG	CPU_ISENSE_R_NEG - @m39_lib.M39	76D4
CPU_ISENSE_R_POS	CPU_ISENSE_R_POS - @m39_lib.M39	76D4
CPU_NMI	CPU_NMI - @m39_lib.M39	5C8 7C7 21C4
CPU_PROCHOT_L	CPU_PROCHOT_L - @m39_lib.M39	7C6 59A8 59C7
CPU_PSI_L	CPU_PSI_L - @m39_lib.M39	7A3 75C6
CPU_PWRGD	CPU_PWRGD - @m39_lib.M39	7B3 21C4
CPU_RCIN_L	CPU_RCIN_L - @m39_lib.M39	21C4
CPU_SENSE_I_R	CPU_SENSE_I_R - @m39_lib.M39	76D7
CPU_SMI_L	CPU_SMI_L - @m39_lib.M39	5C8 7C7 21C4
CPU_STPCLK_L	CPU_STPCLK_L - @m39_lib.M39	5C8 7C7 21C4
CPU_TEST1	CPU_TEST1 - @m39_lib.M39	7B4
CPU_TEST2	CPU_TEST2 - @m39_lib.M39	7B4
CPU_THERMD_EXT_N	CPU_THERMD_EXT_N - @m39_lib.M39	10B6
CPU_THERMD_EXT_P	CPU_THERMD_EXT_P - @m39_lib.M39	10B6
CPU_THERMD_N	CPU_THERMD_N - @m39_lib.M39	7C6 10C6
CPU_THERMD_P	CPU_THERMD_P - @m39_lib.M39	7C6 10C6
CPU_THERMTRIP_R	CPU_THERMTRIP_R - @m39_lib.M39	21C2
CPU_VCCSENSE_N	CPU_VCCSENSE_N - @m39_lib.M39	8B6 75A4
CPU_VCCSENSE_P	CPU_VCCSENSE_P - @m39_lib.M39	8B6 75A4
CPU_VID<0>	CPU_VID<0> - @m39_lib.M39	8B7 75C7
CPU_VID<1>	CPU_VID<1> - @m39_lib.M39	8B7 75C7
CPU_VID<2>	CPU_VID<2> - @m39_lib.M39	8B7 75C7
CPU_VID<3>	CPU_VID<3> - @m39_lib.M39	8B7 75C7
CPU_VID<4>	CPU_VID<4> - @m39_lib.M39	8B7 75C7
CPU_VID<5>	CPU_VID<5> - @m39_lib.M39	8B7 75C7
CPU_VID<6>	CPU_VID<6> - @m39_lib.M39	8B7 75D7
CPU_XDP_CLK_N	CPU_XDP_CLK_N - @m39_lib.M39	11B3 34B3
	FSB_CLK_XDP_N - @m39_lib.M39	34B4 34C2
CPU_XDP_CLK_P	CPU_XDP_CLK_P - @m39_lib.M39	11B3 34B3
	FSB_CLK_XDP_P - @m39_lib.M39	34B4 34C2
CRB_SV_DET	CRB_SV_DET - @m39_lib.M39	23B6 23C3
CRT_BLUE	CRT_BLUE - @m39_lib.M39	13B5 19D4
	=PPVCORE_S0_NB - @m39_lib.M39	6D4 16C8 16D3 19B6 19D5 19D7
	CRT_BLUE_L - @m39_lib.M39	13B5 19D4
	CRT_IREF - @m39_lib.M39	13B5 19D4
	CRT_GREEN_L - @m39_lib.M39	13B5 19D4
	CRT_GREEN - @m39_lib.M39	13B5 19D4
	PP2V5_S0_NB_VCCA_CRTDAC - @m39_lib.M39	17D6 19D4
	CRT_RED - @m39_lib.M39	13B5 19D4
	CRT_RED_L - @m39_lib.M39	13B5 19D4
	PP1V05_S0 - @m39_lib.M39	6D6 34A8 34B8 34C7 81C2
	=PP1V05_S0_CPU - @m39_lib.M39	5D4 6D4 7B5 7B7 7D5 7D5 8C7 9C8 9C8 11B3 11C5 59A1 59A3
	=PPVCORE_S0_SB - @m39_lib.M39	6D4 24D3 25D3
	=PP1V05_S0_SB_CPU_IO - @m39_lib.M39	6D4 21C1 21C1 24C3 25C3
	=PP1V05_S0_NB_VTT - @m39_lib.M39	6D4 17D3 19B8 19D7
	=PP1V05_S0_FSB_NB - @m39_lib.M39	5D4 6D4 12A7 12B7 12C2 19D7
	PP2V5_S0_NB_VCCA_CRTDAC - @m39_lib.M39	17D6 19D4
	PP1V05_S0 - @m39_lib.M39	6D6 34A8 34B8 34C7 81C2
	CRT_RED_L - @m39_lib.M39	13B5 19D4
	CRT_RED - @m39_lib.M39	13B5 19D4
	CRT_IREF - @m39_lib.M39	13B5 19D4
	CRT_GREEN_L - @m39_lib.M39	13B5 19D4
	CRT_GREEN - @m39_lib.M39	13B5 19D4
	CRT_BLUE_L - @m39_lib.M39	13B5 19D4
	=PPVCORE_S0_SB - @m39_lib.M39	6D4 24D3 25D3
	=PPVCORE_S0_NB - @m39_lib.M39	6D4 16C8 16D3 19B6 19D5 19D7
	=PP1V05_S0_SB_CPU_IO - @m39_lib.M39	6D4 21C1 21C1 24C3 25C3
	=PP1V05_S0_NB_VTT - @m39_lib.M39	6D4 17D3 19B8 19D7
	=PP1V05_S0_NB - @m39_lib.M39	6D4 19D7
	=PP1V05_S0_FSB_NB - @m39_lib.M39	5D4 6D4 12A7 12B7 12C2 19D7
	=PP1V05_S0_CPU - @m39_lib.M39	5D4 6D4 7B5 7B7 7D5 7D5 8C7 9C8 9C8 11B3 11C5 59A1 59A3
CRT_DDC_CLK	CRT_DDC_CLK - @m39_lib.M39	13B5 19C4
	TP_CRT_DDC_CLK - @m39_lib.M39	19C5
CRT_DDC_DATA	CRT_DDC_DATA - @m39_lib.M39	13B5 19C4
	TP_CRT_DDC_DATA - @m39_lib.M39	19C5
DEBUG_RST_L	DEBUG_RST_L - @m39_lib.M39	6A7 60B6
DMI_IRCOMP_R	DMI_IRCOMP_R - @m39_lib.M39	22C2
DMI_N2S_N<0>	DMI_N2S_N<0> - @m39_lib.M39	5B8 14B4 22D2
DMI_N2S_N<1>	DMI_N2S_N<1> - @m39_lib.M39	14B4 22D2
DMI_N2S_N<2>	DMI_N2S_N<2> - @m39_lib.M39	14B4 22D2
DMI_N2S_N<3>	DMI_N2S_N<3> - @m39_lib.M39	14B4 22D2
DMI_N2S_P<0>	DMI_N2S_P<0> - @m39_lib.M39	5B8 14B4 22D2
DMI_N2S_P<1>	DMI_N2S_P<1> - @m39_lib.M39	14B4 22D2
DMI_N2S_P<2>	DMI_N2S_P<2> - @m39_lib.M39	14B4 22D2
DMI_N2S_P<3>	DMI_N2S_P<3> - @m39_lib.M39	14B4 22D2
DMI_S2N_N<0>	DMI_S2N_N<0> - @m39_lib.M39	5C7 14B4 22D2
DMI_S2N_N<1>	DMI_S2N_N<1> - @m39_lib.M39	14B4 22D2
DMI_S2N_N<2>	DMI_S2N_N<2> - @m39_lib.M39	14B4 22D2
DMI_S2N_N<3>	DMI_S2N_N<3> - @m39_lib.M39	14B4 22D2
DMI_S2N_P<0>	DMI_S2N_P<0> - @m39_lib.M39	5C7 14B4 22D2
DMI_S2N_P<1>	DMI_S2N_P<1> - @m39_lib.M39	14B4 22D2

DMI_S2N_P<2>	DMI_S2N_P<2> - @m39_lib.M39	14B4 22D2
DMI_S2N_P<3>	DMI_S2N_P<3> - @m39_lib.M39	14B4 22D2
DVI_DDC_CLK	DVI_DDC_CLK - @m39_lib.M39	97D2
DVI_DDC_CLK_UF	DVI_DDC_CLK_UF - @m39_lib.M39	97D3 97D5
DVI_DDC_DATA	DVI_DDC_DATA - @m39_lib.M39	97C2
DVI_DDC_DATA_UF	DVI_DDC_DATA_UF - @m39_lib.M39	97C3 97D5
DVI_HPD_UF	DVI_HPD_UF - @m39_lib.M39	97C3 97D5
ENET_C4106_2	ENET_C4106_2 - @m39_lib.M39	41D2
ENET_C4107_2	ENET_C4107_2 - @m39_lib.M39	41D2
ENET_C4117_1	ENET_C4117_1 - @m39_lib.M39	41B2
ENET_C4118_1	ENET_C4118_1 - @m39_lib.M39	41B2
ENET_CLK100M_PCIE_N	ENET_CLK100M_PCIE_N - @m39_lib.M39	5D5 34A4 34B2 41C5
ENET_CLK100M_PCIE_P	ENET_CLK100M_PCIE_P - @m39_lib.M39	5D5 34A4 34B2 41C5
ENET_CTRL12	ENET_CTRL12 - @m39_lib.M39	41C7 42B8
	TP_ENET_CTRL12 - @m39_lib.M39	42B7
ENET_CTRL25	ENET_CTRL25 - @m39_lib.M39	41C7 42C6
ENET_GATED_RST_L	ENET_GATED_RST_L - @m39_lib.M39	41C5 42D2
ENET_LED_ACT_L	ENET_LED_ACT_L - @m39_lib.M39	41C8 43C3
ENET_LED_LINK10_100_L	ENET_LED_LINK10_100_L - @m39_lib.M39	41C8 43C3
ENET_LED_LINK1000_L	ENET_LED_LINK1000_L - @m39_lib.M39	41C8 43C3
ENET_LED_LINK_L	ENET_LED_LINK_L - @m39_lib.M39	41C8 43C3
ENET_LOM_DIS_L	ENET_LOM_DIS_L - @m39_lib.M39	41C7
ENET_MDI_N<0>	ENET_MDI_N<0> - @m39_lib.M39	41C2 43C7
ENET_MDI_N<1>	ENET_MDI_N<1> - @m39_lib.M39	41C2 43C7
ENET_MDI_N<2>	ENET_MDI_N<2> - @m39_lib.M39	41C2 43C7
ENET_MDI_N<3>	ENET_MDI_N<3> - @m39_lib.M39	41C2 43B7
ENET_MDI_P<0>	ENET_MDI_P<0> - @m39_lib.M39	41C2 43C7
ENET_MDI_P<1>	ENET_MDI_P<1> - @m39_lib.M39	41C2 43C7
ENET_MDI_P<2>	ENET_MDI_P<2> - @m39_lib.M39	41C2 43C7
ENET_MDI_P<3>	ENET_MDI_P<3> - @m39_lib.M39	41C2 43C7
ENET_MDI_R_N<0>	ENET_MDI_R_N<0> - @m39_lib.M39	43C6
ENET_MDI_R_N<1>	ENET_MDI_R_N<1> - @m39_lib.M39	43C6
ENET_MDI_R_N<2>	ENET_MDI_R_N<2> - @m39_lib.M39	43C6
ENET_MDI_R_N<3>	ENET_MDI_R_N<3> - @m39_lib.M39	43B6
ENET_MDI_R_P<0>	ENET_MDI_R_P<0> - @m39_lib.M39	43C6
ENET_MDI_R_P<1>	ENET_MDI_R_P<1> - @m39_lib.M39	43C6
ENET_MDI_R_P<2>	ENET_MDI_R_P<2> - @m39_lib.M39	43C6
ENET_MDI_R_P<3>	ENET_MDI_R_P<3> - @m39_lib.M39	43C6
ENET_PU_VDDO_TTL0	ENET_PU_VDDO_TTL0 - @m39_lib.M39	41C5
ENET_PU_VDDO_TTL1	ENET_PU_VDDO_TTL1 - @m39_lib.M39	41C5
ENET_RSET	ENET_RSET - @m39_lib.M39	41C7
ENET_RST_L	ENET_RST_L - @m39_lib.M39	6B7 42D3
ENET_VPD_CLK	ENET_VPD_CLK - @m39_lib.M39	41A2 41C4
ENET_VPD_DATA	ENET_VPD_DATA - @m39_lib.M39	41A2 41C4
ENET_XTALI	ENET_XTALI - @m39_lib.M39	41B5
ENET_XTALO	ENET_XTALO - @m39_lib.M39	41B5
F0_GATESLOWDN	F0_GATESLOWDN - @m39_lib.M39	65D5
F0_RCFEEDBK	F0_RCFEEDBK - @m39_lib.M39	65C5
F0_VOLTAGE8R5	F0_VOLTAGE8R5 - @m39_lib.M39	65D6
F1_GATESLOWDN	F1_GATESLOWDN - @m39_lib.M39	65B5
F1_RCFEEDBK	F1_RCFEEDBK - @m39_lib.M39	65B5
F1_VOLTAGE8R5	F1_VOLTAGE8R5 - @m39_lib.M39	65B6
F2_GATESLOWDN	F2_GATESLOWDN - @m39_lib.M39	66D4
F2_RCFEEDBK	F2_RCFEEDBK - @m39_lib.M39	66C5
F2_VOLTAGE8R5	F2_VOLTAGE8R5 - @m39_lib.M39	66D5
FAN_0_OUT	FAN_0_OUT - @m39_lib.M39	65C4
FAN_0_PWR	FAN_0_PWR - @m39_lib.M39	65C4
FAN_1_CTL	FAN_1_CTL - @m39_lib.M39	65B7
	FAN_RPM1 - @m39_lib.M39	65B7
FAN_1_OUT	FAN_1_OUT - @m39_lib.M39	65B4
FAN_1_PWR	FAN_1_PWR - @m39_lib.M39	65B3
FAN_2_CTL	FAN_2_CTL - @m39_lib.M39	66D7
	FAN_RPM2 - @m39_lib.M39	66C7
FAN_2_OUT	FAN_2_OUT - @m39_lib.M39	66C4
FAN_2_PWR	FAN_2_PWR - @m39_lib.M39	66C3
FAN_TACH0	FAN_TACH0 - @m39_lib.M39	65C7
FAN_TACH1	FAN_TACH1 - @m39_lib.M39	65A7
FAN_TACH2	FAN_TACH2 - @m39_lib.M39	66C7
FB_A0_MF	FB_A0_MF - @m39_lib.M39	89A7
FB_A0_SEN	FB_A0_SEN - @m39_lib.M39	89A7
FB_A0_VREF0	FB_A0_VREF0 - @m39_lib.M39	89C7
FB_A0_VREF1	FB_A0_VREF1 - @m39_lib.M39	89C7
FB_A0_ZQ	FB_A0_ZQ - @m39_lib.M39	89A7
FB_A1_MF	FB_A1_MF - @m39_lib.M39	89A4
FB_A1_SEN	FB_A1_SEN - @m39_lib.M39	89A4
FB_A1_VREF0	FB_A1_VREF0 - @m39_lib.M39	89C4
FB_A1_VREF1	FB_A1_VREF1 - @m39_lib.M39	89C4
FB_A1_ZQ	FB_A1_ZQ - @m39_lib.M39	89A4
FB_A_BA<0>	FB_A_BA<0> - @m39_lib.M39	87D5 89A5 89A8
FB_A_BA<1>	FB_A_BA<1> - @m39_lib.M39	87D5 89A5 89A8
FB_A_BA<2>	FB_A_BA<2> - @m39_lib.M39	87D5 89A5 89A8
FB_A_CAS_L<0>	FB_A_CAS_L<0> - @m39_lib.M39	5B6 87B5 89A8
FB_A_CAS_L<1>	FB_A_CAS_L<1> - @m39_lib.M39	5A6 87B5 89A5
FB_A_CKE<0>	FB_A_CKE<0> - @m39_lib.M39	5B6 87B5 89B8
FB_A_CKE<1>	FB_A_CKE<1> - @m39_lib.M39	5A6 87B5 89B5
FB_A_CLK_N<0>	FB_A_CLK_N<0> - @m39_lib.M39	5B6 87B5 89B8
FB_A_CLK_N<1>	FB_A_CLK_N<1> - @m39_lib.M39	5A6 87B5 89B5
FB_A_CLK_P<0>	FB_A_CLK_P<0> - @m39_lib.M39	5B6 87B5 89B8
FB_A_CLK_P<1>	FB_A_CLK_P<1> - @m39_lib.M39	5A6 87B5 89B5
FB_A_CS_L<0>	FB_A_CS_L<0> - @m39_lib.M39	5B6 87B5 89B8
FB_A_CS_L<1>	FB_A_CS_L<1> - @m39_lib.M39	5A6 87B5 89B5
FB_A_DQ<0>	FB_A_DQ<0> - @m39_lib.M39	5B6 5D6 87D7 89B6
FB_A_DQ<1>	FB_A_DQ<1> - @m39_lib.M39	87D7 89B6
FB_A_DQ<2>	FB_A_DQ<2> - @m39_lib.M39	87D7 89B6
FB_A_DQ<3>	FB_A_DQ<3> - @m39_lib.M39	87D7 89B6
FB_A_DQ<4>	FB_A_DQ<4> - @m39_lib.M39	87D7 89B6
FB_A_DQ<5>	FB_A_DQ<5> - @m39_lib.M39	87D7 89B6
FB_A_DQ<6>	FB_A_DQ<6> - @m39_lib.M39	87D7 89B6
FB_A_DQ<7>	FB_A_DQ<7> - @m39_lib.M39	87D7 89B6
FB_A_DQ<8>	FB_A_DQ<8> - @m39_lib.M39	5A6 5D6 87D7 89A6
FB_A_DQ<9>	FB_A_DQ<9> - @m39_lib.M39	87D7 89A6
FB_A_DQ<10>	FB_A_DQ<10> - @m39_lib.M39	87D7 89A6
FB_A_DQ<11>	FB_A_DQ<11> - @m39_lib.M39	87D7 89A6
FB_A_DQ<12>	FB_A_DQ<12> - @m39_lib.M39	87D7 89A6
FB_A_DQ<13>	FB_A_DQ<13> - @m39_lib.M39	87D7 89A6
FB_A_DQ<14>	FB_A_DQ<14> - @m39_lib.M39	87D7 89A6
FB_A_DQ<15>	FB_A_DQ<15> - @m39_lib.M39	87D7 89A6
FB_A_DQ<16>	FB_A_DQ<16> - @m39_lib.M39	5A6 5D6 87D7 89A6
FB_A_DQ<17>	FB_A_DQ<17> - @m39_lib.M39	87D7 89A6
FB_A_DQ<18>	FB_A_DQ<18> - @m39_lib.M39	87C7 89A6
FB_A_DQ<19>	FB_A_DQ<19> - @m39_lib.M39	87C7 89A6
FB_A_DQ<20>	FB_A_DQ<20> - @m39_lib.M39	87C7 89A6
FB_A_DQ<21>	FB_A_DQ<21> - @m39_lib.M39	87C7 89A6
FB_A_DQ<22>	FB_A_DQ<22> - @m39_lib.M39	87C7 89A6
FB_A_DQ<23>	FB_A_DQ<23> - @m39_lib.M39	87C7 89A6
FB_A_DQ<24>	FB_A_DQ<24> - @m39_lib.M39	5A6 5D6 87C7 89A6
FB_A_DQ<25>	FB_A_DQ<25> - @m39_lib.M39	87C7 89A6
FB_A_DQ<26>	FB_A_DQ<26> - @m39_lib.M39	87C7 89A6
FB_A_DQ<27>	FB_A_DQ<27> - @m39_lib.M39	87C7 89B6
FB_A_DQ<28>	FB_A_DQ<28> - @m39_lib.M39	87C7 89B6
FB_A_DQ<29>	FB_A_DQ<29> - @m39_lib.M39	87C7 89B6
FB_A_DQ<30>	FB_A_DQ<30> - @m39_lib.M39	87C7 89B6
FB_A_DQ<31>	FB_A_DQ<31> - @m39_lib.M39	87C7 89A6

FB_A_DQ<32>	FB_A_DQ<32> - @m39_lib.M39	5A6 5D6 87C7 89B2
FB_A_DQ<33>	FB_A_DQ<33> - @m39_lib.M39	87C7 89B3
FB_A_DQ<34>	FB_A_DQ<34> - @m39_lib.M39	87C7 89B3
FB_A_DQ<35>	FB_A_DQ<35> - @m39_lib.M39	87C7 89B3
FB_A_DQ<36>	FB_A_DQ<36> - @m39_lib.M39	87C7 89B3
FB_A_DQ<37>	FB_A_DQ<37> - @m39_lib.M39	87C7 89B3
FB_A_DQ<38>	FB_A_DQ<38> - @m39_lib.M39	87C7 89B3
FB_A_DQ<39>	FB_A_DQ<39> - @m39_lib.M39	87C7 89B3
FB_A_DQ<40>	FB_A_DQ<40> - @m39_lib.M39	5A6 5D6 87C7 89A2
FB_A_DQ<41>	FB_A_DQ<41> - @m39_lib.M39	87C7 89A3
FB_A_DQ<42>	FB_A_DQ<42> - @m39_lib.M39	87C7 89A3
FB_A_DQ<43>	FB_A_DQ<43> - @m39_lib.M39	87C7 89A3
FB_A_DQ<44>	FB_A_DQ<44> - @m39_lib.M39	87B7 89A3
FB_A_DQ<45>	FB_A_DQ<45> - @m39_lib.M39	87B7 89A3
FB_A_DQ<46>	FB_A_DQ<46> - @m39_lib.M39	87B7 89A3
FB_A_DQ<47>	FB_A_DQ<47> - @m39_lib.M39	87B7 89A3
FB_A_DQ<48>	FB_A_DQ<48> - @m39_lib.M39	5A6 5D6 87B7 89A2
FB_A_DQ<49>	FB_A_DQ<49> - @m39_lib.M39	87B7 89A3
FB_A_DQ<50>	FB_A_DQ<50> - @m39_lib.M39	87B7 89A3
FB_A_DQ<51>	FB_A_DQ<51> - @m39_lib.M39	87B7 89A3
FB_A_DQ<52>	FB_A_DQ<52> - @m39_lib.M39	87B7 89A3
FB_A_DQ<53>	FB_A_DQ<53> - @m39_lib.M39	87B7 89A3
FB_A_DQ<54>	FB_A_DQ<54> - @m39_lib.M39	87B7 89A3
FB_A_DQ<55>	FB_A_DQ<55> - @m39_lib.M39	87B7 89A3
FB_A_DQ<56>	FB_A_DQ<56> - @m39_lib.M39	5A6 5D6 87B7 89A2
FB_A_DQ<57>	FB_A_DQ<57> - @m39_lib.M39	87B7 89A3
FB_A_DQ<58>	FB_A_DQ<58> - @m39_lib.M39	87B7 89B3
FB_A_DQ<59>	FB_A_DQ<59> - @m39_lib.M39	87B7 89B3
FB_A_DQ<60>	FB_A_DQ<60> - @m39_lib.M39	87B7 89B3
FB_A_DQ<61>	FB_A_DQ<61> - @m39_lib.M39	87B7 89B3
FB_A_DQ<62>	FB_A_DQ<62> - @m39_lib.M39	87B7 89A3
FB_A_DQ<63>	FB_A_DQ<63> - @m39_lib.M39	87B7 89A3
FB_A_DQM_L<0>	FB_A_DQM_L<0> - @m39_lib.M39	87D5 89B6
FB_A_DQM_L<1>	FB_A_DQM_L<1> - @m39_lib.M39	87C5 89B6
FB_A_DQM_L<2>	FB_A_DQM_L<2> - @m39_lib.M39	87C5 89B6
FB_A_DQM_L<3>	FB_A_DQM_L<3> - @m39_lib.M39	87C5 89B6
FB_A_DQM_L<4>	FB_A_DQM_L<4> - @m39_lib.M39	87C5 89B3
FB_A_DQM_L<5>	FB_A_DQM_L<5> - @m39_lib.M39	87C5 89B3
FB_A_DQM_L<6>	FB_A_DQM_L<6> - @m39_lib.M39	87C5 89B3
FB_A_DQM_L<7>	FB_A_DQM_L<7> - @m39_lib.M39	87C5 89B3
FB_A_MA<0>	FB_A_MA<0> - @m39_lib.M39	87D5 89B5 89B8
FB_A_MA<1>	FB_A_MA<1> - @m39_lib.M39	87D5 89B5 89B8
FB_A_MA<2>	FB_A_MA<2> - @m39_lib.M39	87D5 89B5 89B8
FB_A_MA<3>	FB_A_MA<3> - @m39_lib.M39	5A6 5B6 5D6 87D5 89B5 89B8
FB_A_MA<4>	FB_A_MA<4> - @m39_lib.M39	87D5 89B5 89B8
FB_A_MA<5>	FB_A_MA<5> - @m39_lib.M39	87D5 89B5 89B8
FB_A_MA<6>	FB_A_MA<6> - @m39_lib.M39	87D5 89B5 89B8
FB_A_MA<7>	FB_A_MA<7> - @m39_lib.M39	87D5 89B5 89B8
FB_A_MA<8>	FB_A_MA<8> - @m39_lib.M39	87D5 89B5 89B8
FB_A_MA<9>	FB_A_MA<9> - @m39_lib.M39	87D5 89B5 89B8
FB_A_MA<10>	FB_A_MA<10> - @m39_lib.M39	87D5 89B5 89B8
FB_A_MA<11>	FB_A_MA<11> - @m39_lib.M39	87D5 89B5 89B8
FB_A_RAS_L<0>	FB_A_RAS_L<0> - @m39_lib.M39	5B6 87B5 89A8
FB_A_RAS_L<1>	FB_A_RAS_L<1> - @m39_lib.M39	5A6 87B5 89A5
FB_A_RDQS<0>	FB_A_RDQS<0> - @m39_lib.M39	5D6 87C5 89A8
FB_A_RDQS<1>	FB_A_RDQS<1> - @m39_lib.M39	5D6 87C5 89A8
FB_A_RDQS<2>	FB_A_RDQS<2> - @m39_lib.M39	5D6 87C5 89A8
FB_A_RDQS<3>	FB_A_RDQS<3> - @m39_lib.M39	5D6 87C5 89A8
FB_A_RDQS<4>	FB_A_RDQS<4> - @m39_lib.M39	5D6 87C5 89A5
FB_A_RDQS<5>	FB_A_RDQS<5> - @m39_lib.M39	5D6 87C5 89A5
FB_A_RDQS<6>	FB_A_RDQS<6> - @m39_lib.M39	5D6 87C5 89A5
FB_A_RDQS<7>	FB_A_RDQS<7> - @m39_lib.M39	5D6 87C5 89A5
FB_A_WDQS<0>	FB_A_WDQS<0> - @m39_lib.M39	5B6 87C5 89A8
FB_A_WDQS<1>	FB_A_WDQS<1> - @m39_lib.M39	5B6 87C5 89A8
FB_A_WDQS<2>	FB_A_WDQS<2> - @m39_lib.M39	5B6 87C5 89A8
FB_A_WDQS<3>	FB_A_WDQS<3> - @m39_lib.M39	5B6 87C5 89A8
FB_A_WDQS<4>	FB_A_WDQS<4> - @m39_lib.M39	5A6 87C5 89A5
FB_A_WDQS<5>	FB_A_WDQS<5> - @m39_lib.M39	5A6 87C5 89A5
FB_A_WDQS<6>	FB_A_WDQS<6> - @m39_lib.M39	5A6 87C5 89A5
FB_A_WDQS<7>	FB_A_WDQS<7> - @m39_lib.M39	5A6 87C5 89A5
FB_A_WE_L<0>	FB_A_WE_L<0> - @m39_lib.M39	5B6 87B5 89A8
FB_A_WE_L<1>	FB_A_WE_L<1> - @m39_lib.M39	5A6 87B5 89A5
FB_B0_MF	FB_B0_MF - @m39_lib.M39	90A7
FB_B0_SEN	FB_B0_SEN - @m39_lib.M39	90A7
FB_B0_VREF0	FB_B0_VREF0 - @m39_lib.M39	90C7
FB_B0_VREF1	FB_B0_VREF1 - @m39_lib.M39	90C7
FB_B0_ZQ	FB_B0_ZQ - @m39_lib.M39	90A7
FB_B1_MF	FB_B1_MF - @m39_lib.M39	90A4
FB_B1_SEN	FB_B1_SEN - @m39_lib.M39	90A4
FB_B1_VREF0	FB_B1_VREF0 - @m39_lib.M39	90C4
FB_B1_VREF1	FB_B1_VREF1 - @m39_lib.M39	90C4
FB_B1_ZQ	FB_B1_ZQ - @m39_lib.M39	90A4
FB_B_BA<0>	FB_B_BA<0> - @m39_lib.M39	87D1 90A5 90A8
FB_B_BA<1>	FB_B_BA<1> - @m39_lib.M39	87D1 90A5 90A8
FB_B_BA<2>	FB_B_BA<2> - @m39_lib.M39	87D1 90A5 90A8
FB_B_CAS_L<0>	FB_B_CAS_L<0> - @m39_lib.M39	5B5 87B1 90A8
FB_B_CAS_L<1>	FB_B_CAS_L<1> - @m39_lib.M39	5A5 87B1 90A5
FB_B_CKE<0>	FB_B_CKE<0> - @m39_lib.M39	5B5 87B1 90B8
FB_B_CKE<1>	FB_B_CKE<1> - @m39_lib.M39	5A5 87B1 90B5
FB_B_CLK_N<0>	FB_B_CLK_N<0> - @m39_lib.M39	5B5 87B1 90B8
FB_B_CLK_N<1>	FB_B_CLK_N<1> - @m39_lib.M39	5A5 87B1 90B5
FB_B_CLK_P<0>	FB_B_CLK_P<0> - @m39_lib.M39	5B5 87B1 90B8
FB_B_CLK_P<1>	FB_B_CLK_P<1> - @m39_lib.M39	5A5 87B1 90B5
FB_B_CS_L<0>	FB_B_CS_L<0> - @m39_lib.M39	5B5 87B1 90B8
FB_B_CS_L<1>	FB_B_CS_L<1> - @m39_lib.M39	5A5 87B1 90B5
FB_B_DQ<0>	FB_B_DQ<0> - @m39_lib.M39	5B5 5D6 87D3 90A6
FB_B_DQ<1>	FB_B_DQ<1> - @m39_lib.M39	87D3 90A6
FB_B_DQ<2>	FB_B_DQ<2> - @m39_lib.M39	87D3 90B6
FB_B_DQ<3>	FB_B_DQ<3> - @m39_lib.M39	87D3 90B6
FB_B_DQ<4>	FB_B_DQ<4> - @m39_lib.M39	87D3 90B6
FB_B_DQ<5>	FB_B_DQ<5> - @m39_lib.M39	87D3 90A6
FB_B_DQ<6>	FB_B_DQ<6> - @m39_lib.M39	87D3 90A6
FB_B_DQ<7>	FB_B_DQ<7> - @m39_lib.M39	87D3 90B6
FB_B_DQ<8>	FB_B_DQ<8> - @m39_lib.M39	5A5 5D6 87D3 90A6
FB_B_DQ<9>	FB_B_DQ<9> - @m39_lib.M39	87D3 90A6
FB_B_DQ<10>	FB_B_DQ<10> - @m39_lib.M39	87D3 90A6
FB_B_DQ<11>	FB_B_DQ<11> - @m39_lib.M39	87D3 90A6
FB_B_DQ<12>	FB_B_DQ<12> - @m39_lib.M39	87D3 90A6
FB_B_DQ<13>	FB_B_DQ<13> - @m39_lib.M39	87D3 90A6
FB_B_DQ<14>	FB_B_DQ<14> - @m39_lib.M39	87D3 90A6
FB_B_DQ<15>	FB_B_DQ<15> - @m39_lib.M39	87D3 90A6
FB_B_DQ<16>	FB_B_DQ<16> - @m39_lib.M39	5A5 5D6 87D3 90A6
FB_B_DQ<17>	FB_B_DQ<17> - @m39_lib.M39	87D3 90A6
FB_B_DQ<18>	FB_B_DQ<18> - @m39_lib.M39	87C3 90A6
FB_B_DQ<19>	FB_B_DQ<19> - @m39_lib.M39	87C3 90A6
FB_B_DQ<20>	FB_B_DQ<20> - @m39_lib.M39	87C3 90A6
FB_B_DQ<21>	FB_B_DQ<21> - @m39_lib.M39	87C3 90A6
FB_B_DQ<22>	FB_B_DQ<22> - @m39_lib.M39	87C3 90A6
FB_B_DQ<23>	FB_B_DQ<23> - @m39_lib.M39	87C3 90A6
FB_B_DQ<24>	FB_B_DQ<24> - @m39_lib.M39	5A5 5C6 87C3 90B6
FB_B_DQ<25>	FB_B_DQ<25> - @m39_lib.M39	87C3 90B6
FB_B_DQ<26>	FB_B_DQ<26> - @m39_lib.M39	87C3 90B6
FB_B_DQ<27>	FB_B_DQ<27> - @m39_lib.M39	87C3 90B6

www.teknisi-indonesia.com

FB_B_DQ<28>	FB_B_DQ<28> - @m39_lib.M39	87C3 90B6
FB_B_DQ<29>	FB_B_DQ<29> - @m39_lib.M39	87C3 90B6
FB_B_DQ<30>	FB_B_DQ<30> - @m39_lib.M39	87C3 90B6
FB_B_DQ<31>	FB_B_DQ<31> - @m39_lib.M39	87C3 90B6
FB_B_DQ<32>	FB_B_DQ<32> - @m39_lib.M39	5A5 5C6 87C3 90A2
FB_B_DQ<33>	FB_B_DQ<33> - @m39_lib.M39	87C3 90B3
FB_B_DQ<34>	FB_B_DQ<34> - @m39_lib.M39	87C3 90B3
FB_B_DQ<35>	FB_B_DQ<35> - @m39_lib.M39	87C3 90A3
FB_B_DQ<36>	FB_B_DQ<36> - @m39_lib.M39	87C3 90B3
FB_B_DQ<37>	FB_B_DQ<37> - @m39_lib.M39	87C3 90B3
FB_B_DQ<38>	FB_B_DQ<38> - @m39_lib.M39	87C3 90A3
FB_B_DQ<39>	FB_B_DQ<39> - @m39_lib.M39	87C3 90A3
FB_B_DQ<40>	FB_B_DQ<40> - @m39_lib.M39	5A5 5C6 87C3 90A2
FB_B_DQ<41>	FB_B_DQ<41> - @m39_lib.M39	87C3 90A3
FB_B_DQ<42>	FB_B_DQ<42> - @m39_lib.M39	87C3 90A3
FB_B_DQ<43>	FB_B_DQ<43> - @m39_lib.M39	87C3 90A3
FB_B_DQ<44>	FB_B_DQ<44> - @m39_lib.M39	87B3 90A3
FB_B_DQ<45>	FB_B_DQ<45> - @m39_lib.M39	87B3 90A3
FB_B_DQ<46>	FB_B_DQ<46> - @m39_lib.M39	87B3 90A3
FB_B_DQ<47>	FB_B_DQ<47> - @m39_lib.M39	87B3 90A3
FB_B_DQ<48>	FB_B_DQ<48> - @m39_lib.M39	5A5 5C6 87B3 90A2
FB_B_DQ<49>	FB_B_DQ<49> - @m39_lib.M39	87B3 90A3
FB_B_DQ<50>	FB_B_DQ<50> - @m39_lib.M39	87B3 90A3
FB_B_DQ<51>	FB_B_DQ<51> - @m39_lib.M39	87B3 90A3
FB_B_DQ<52>	FB_B_DQ<52> - @m39_lib.M39	87B3 90A3
FB_B_DQ<53>	FB_B_DQ<53> - @m39_lib.M39	87B3 90A3
FB_B_DQ<54>	FB_B_DQ<54> - @m39_lib.M39	87B3 90A3
FB_B_DQ<55>	FB_B_DQ<55> - @m39_lib.M39	87B3 90A3
FB_B_DQ<56>	FB_B_DQ<56> - @m39_lib.M39	5A5 5C6 87B3 90B2
FB_B_DQ<57>	FB_B_DQ<57> - @m39_lib.M39	87B3 90B3
FB_B_DQ<58>	FB_B_DQ<58> - @m39_lib.M39	87B3 90B3
FB_B_DQ<59>	FB_B_DQ<59> - @m39_lib.M39	87B3 90B3
FB_B_DQ<60>	FB_B_DQ<60> - @m39_lib.M39	87B3 90B3
FB_B_DQ<61>	FB_B_DQ<61> - @m39_lib.M39	87B3 90B3
FB_B_DQ<62>	FB_B_DQ<62> - @m39_lib.M39	87B3 90B3
FB_B_DQ<63>	FB_B_DQ<63> - @m39_lib.M39	87B3 90B3
FB_B_DQM_L<0>	FB_B_DQM_L<0> - @m39_lib.M39	87D1 90B6
FB_B_DQM_L<1>	FB_B_DQM_L<1> - @m39_lib.M39	87C1 90B6
FB_B_DQM_L<2>	FB_B_DQM_L<2> - @m39_lib.M39	87C1 90B6
FB_B_DQM_L<3>	FB_B_DQM_L<3> - @m39_lib.M39	87C1 90B6
FB_B_DQM_L<4>	FB_B_DQM_L<4> - @m39_lib.M39	87C1 90B3
FB_B_DQM_L<5>	FB_B_DQM_L<5> - @m39_lib.M39	87C1 90B3
FB_B_DQM_L<6>	FB_B_DQM_L<6> - @m39_lib.M39	87C1 90B3
FB_B_DQM_L<7>	FB_B_DQM_L<7> - @m39_lib.M39	87C1 90B3
FB_B_MA<0>	FB_B_MA<0> - @m39_lib.M39	87D1 90B5 90B8
FB_B_MA<1>	FB_B_MA<1> - @m39_lib.M39	87D1 90B5 90B8
FB_B_MA<2>	FB_B_MA<2> - @m39_lib.M39	87D1 90B5 90B8
FB_B_MA<3>	FB_B_MA<3> - @m39_lib.M39	5A5 5B5 5C6 87D1 90B5 90B8
FB_B_MA<4>	FB_B_MA<4> - @m39_lib.M39	87D1 90B5 90B8
FB_B_MA<5>	FB_B_MA<5> - @m39_lib.M39	87D1 90B5 90B8
FB_B_MA<6>	FB_B_MA<6> - @m39_lib.M39	87D1 90B5 90B8
FB_B_MA<7>	FB_B_MA<7> - @m39_lib.M39	87D1 90B5 90B8
FB_B_MA<8>	FB_B_MA<8> - @m39_lib.M39	87D1 90B5 90B8
FB_B_MA<9>	FB_B_MA<9> - @m39_lib.M39	87D1 90B5 90B8
FB_B_MA<10>	FB_B_MA<10> - @m39_lib.M39	87D1 90B5 90B8
FB_B_MA<11>	FB_B_MA<11> - @m39_lib.M39	87D1 90B5 90B8
FB_B_RAS_L<0>	FB_B_RAS_L<0> - @m39_lib.M39	5B5 87B1 90A8
FB_B_RAS_L<1>	FB_B_RAS_L<1> - @m39_lib.M39	5A5 87B1 90A5
FB_B_RDQS<0>	FB_B_RDQS<0> - @m39_lib.M39	5C6 87C1 90A8
FB_B_RDQS<1>	FB_B_RDQS<1> - @m39_lib.M39	5C6 87C1 90A8
FB_B_RDQS<2>	FB_B_RDQS<2> - @m39_lib.M39	5C6 87C1 90A8
FB_B_RDQS<3>	FB_B_RDQS<3> - @m39_lib.M39	5C6 87C1 90A8
FB_B_RDQS<4>	FB_B_RDQS<4> - @m39_lib.M39	5C6 87C1 90A5
FB_B_RDQS<5>	FB_B_RDQS<5> - @m39_lib.M39	5C6 87C1 90A5
FB_B_RDQS<6>	FB_B_RDQS<6> - @m39_lib.M39	5C6 87C1 90A5
FB_B_RDQS<7>	FB_B_RDQS<7> - @m39_lib.M39	5C6 87C1 90A5
FB_B_WDQS<0>	FB_B_WDQS<0> - @m39_lib.M39	5B5 87C1 90A8
FB_B_WDQS<1>	FB_B_WDQS<1> - @m39_lib.M39	5B5 87C1 90A8
FB_B_WDQS<2>	FB_B_WDQS<2> - @m39_lib.M39	5B5 87C1 90A8
FB_B_WDQS<3>	FB_B_WDQS<3> - @m39_lib.M39	5B5 87C1 90A8
FB_B_WDQS<4>	FB_B_WDQS<4> - @m39_lib.M39	5A5 87C1 90A5
FB_B_WDQS<5>	FB_B_WDQS<5> - @m39_lib.M39	5A5 87C1 90A5
FB_B_WDQS<6>	FB_B_WDQS<6> - @m39_lib.M39	5A5 87C1 90A5
FB_B_WDQS<7>	FB_B_WDQS<7> - @m39_lib.M39	5A5 87C1 90A5
FB_B_WE_L<0>	FB_B_WE_L<0> - @m39_lib.M39	5B5 87B1 90A8
FB_B_WE_L<1>	FB_B_WE_L<1> - @m39_lib.M39	5A5 87B1 90A5
FB_DRAM_RST	FB_DRAM_RST - @m39_lib.M39	87A1 88A8
	DRAM_RST - @m39_lib.M39	5A5 5A6 5B5 5B6 88A6 89A5 89A8 90A5 90A8
FSB_ADSTB_L<0>	FSB_ADSTB_L<0> - @m39_lib.M39	5D7 5D8 7D7 12C4
FSB_ADSTB_L<1>	FSB_ADSTB_L<1> - @m39_lib.M39	5D7 5D8 7C7 12C4
FSB_ADS_L	FSB_ADS_L - @m39_lib.M39	7D6 12C4
FSB_A_L<3>	FSB_A_L<3> - @m39_lib.M39	7D7 12D4
FSB_A_L<4>	FSB_A_L<4> - @m39_lib.M39	7D7 12D4
FSB_A_L<5>	FSB_A_L<5> - @m39_lib.M39	7D7 12D4
FSB_A_L<6>	FSB_A_L<6> - @m39_lib.M39	5D7 5D8 7D7 12D4
FSB_A_L<7>	FSB_A_L<7> - @m39_lib.M39	7D7 12D4
FSB_A_L<8>	FSB_A_L<8> - @m39_lib.M39	7D7 12D4
FSB_A_L<9>	FSB_A_L<9> - @m39_lib.M39	7D7 12D4
FSB_A_L<10>	FSB_A_L<10> - @m39_lib.M39	7D7 12D4
FSB_A_L<11>	FSB_A_L<11> - @m39_lib.M39	7D7 12D4
FSB_A_L<12>	FSB_A_L<12> - @m39_lib.M39	7D7 12D4
FSB_A_L<13>	FSB_A_L<13> - @m39_lib.M39	7D7 12D4
FSB_A_L<14>	FSB_A_L<14> - @m39_lib.M39	7D7 12D4
FSB_A_L<15>	FSB_A_L<15> - @m39_lib.M39	7D7 12D4
FSB_A_L<16>	FSB_A_L<16> - @m39_lib.M39	7D7 12C4
FSB_A_L<17>	FSB_A_L<17> - @m39_lib.M39	7C7 12C4
FSB_A_L<18>	FSB_A_L<18> - @m39_lib.M39	7C7 12C4
FSB_A_L<19>	FSB_A_L<19> - @m39_lib.M39	7C7 12C4
FSB_A_L<20>	FSB_A_L<20> - @m39_lib.M39	7C7 12C4
FSB_A_L<21>	FSB_A_L<21> - @m39_lib.M39	7C7 12C4
FSB_A_L<22>	FSB_A_L<22> - @m39_lib.M39	7C7 12C4
FSB_A_L<23>	FSB_A_L<23> - @m39_lib.M39	7C7 12C4
FSB_A_L<24>	FSB_A_L<24> - @m39_lib.M39	7C7 12C4
FSB_A_L<25>	FSB_A_L<25> - @m39_lib.M39	7C7 12C4
FSB_A_L<26>	FSB_A_L<26> - @m39_lib.M39	7C7 12C4
FSB_A_L<27>	FSB_A_L<27> - @m39_lib.M39	5D7 5D8 7C7 12C4
FSB_A_L<28>	FSB_A_L<28> - @m39_lib.M39	7C7 12C4
FSB_A_L<29>	FSB_A_L<29> - @m39_lib.M39	7C7 12C4
FSB_A_L<30>	FSB_A_L<30> - @m39_lib.M39	7C7 12C4
FSB_A_L<31>	FSB_A_L<31> - @m39_lib.M39	7C7 12C4
FSB_BNR_L	FSB_BNR_L - @m39_lib.M39	5C7 7D6 12C4
FSB_BPRI_L	FSB_BPRI_L - @m39_lib.M39	7D6 12C4
FSB_BREQ0_L	FSB_BREQ0_L - @m39_lib.M39	5C7 7D6 12C4
FSB_CLK_CPU_N	FSB_CLK_CPU_N - @m39_lib.M39	5C8 7C6 34B4 34C2
FSB_CLK_CPU_P	FSB_CLK_CPU_P - @m39_lib.M39	5C8 7C6 34B4 34C2
FSB_CLK_NB_N	FSB_CLK_NB_N - @m39_lib.M39	5C7 12A6 34B4 34C2
FSB_CLK_NB_P	FSB_CLK_NB_P - @m39_lib.M39	5C7 12A6 34B4 34C2
FSB_CPURST_L	FSB_CPURST_L - @m39_lib.M39	5C8 7D6 11B5 12C4
FSB_DBSY_L	FSB_DBSY_L - @m39_lib.M39	5C7 7D6 12B4
FSB_DEFER_L	FSB_DEFER_L - @m39_lib.M39	7D6 12B4
FSB_DINV_L<0>	FSB_DINV_L<0> - @m39_lib.M39	5D7 5D8 7C4 12B4
FSB_DINV_L<1>	FSB_DINV_L<1> - @m39_lib.M39	5D7 5D8 7B4 12B4

FSB_DINV_L<2>	FSB_DINV_L<2> - @m39_lib.M39	5D7 5D8 7C2 12B4
FSB_DINV_L<3>	FSB_DINV_L<3> - @m39_lib.M39	5D7 5D8 7B2 12B4
FSB_DPWR_L	FSB_DPWR_L - @m39_lib.M39	5C7 7B3 12B4
FSB_DRDY_L	FSB_DRDY_L - @m39_lib.M39	7D6 12B4
FSB_DSTBN_L<0>	FSB_DSTBN_L<0> - @m39_lib.M39	5D7 5D8 7C4 12B4
FSB_DSTBN_L<1>	FSB_DSTBN_L<1> - @m39_lib.M39	5D7 5D8 7B4 12B4
FSB_DSTBN_L<2>	FSB_DSTBN_L<2> - @m39_lib.M39	5D7 5D8 7C2 12B4
FSB_DSTBN_L<3>	FSB_DSTBN_L<3> - @m39_lib.M39	5D7 5D8 7B2 12B4
FSB_DSTBP_L<0>	FSB_DSTBP_L<0> - @m39_lib.M39	5D7 5D8 7C4 12B4
FSB_DSTBP_L<1>	FSB_DSTBP_L<1> - @m39_lib.M39	5D7 5D8 7B4 12B4
FSB_DSTBP_L<2>	FSB_DSTBP_L<2> - @m39_lib.M39	5D7 5D8 7C2 12B4
FSB_DSTBP_L<3>	FSB_DSTBP_L<3> - @m39_lib.M39	5D7 5D8 7B2 12B4
FSB_D_L<0>	FSB_D_L<0> - @m39_lib.M39	5D7 5D8 7C4 12D6
FSB_D_L<1>	FSB_D_L<1> - @m39_lib.M39	7C4 12D6
FSB_D_L<2>	FSB_D_L<2> - @m39_lib.M39	7C4 12D6
FSB_D_L<3>	FSB_D_L<3> - @m39_lib.M39	7C4 12D6
FSB_D_L<4>	FSB_D_L<4> - @m39_lib.M39	7C4 12D6
FSB_D_L<5>	FSB_D_L<5> - @m39_lib.M39	7C4 12D6
FSB_D_L<6>	FSB_D_L<6> - @m39_lib.M39	7C4 12D6
FSB_D_L<7>	FSB_D_L<7> - @m39_lib.M39	7C4 12D6
FSB_D_L<8>	FSB_D_L<8> - @m39_lib.M39	7C4 12D6
FSB_D_L<9>	FSB_D_L<9> - @m39_lib.M39	7C4 12D6
FSB_D_L<10>	FSB_D_L<10> - @m39_lib.M39	7C4 12D6
FSB_D_L<11>	FSB_D_L<11> - @m39_lib.M39	7C4 12D6
FSB_D_L<12>	FSB_D_L<12> - @m39_lib.M39	7C4 12D6
FSB_D_L<13>	FSB_D_L<13> - @m39_lib.M39	7C4 12C6
FSB_D_L<14>	FSB_D_L<14> - @m39_lib.M39	7C4 12C6
FSB_D_L<15>	FSB_D_L<15> - @m39_lib.M39	7C4 12C6
FSB_D_L<16>	FSB_D_L<16> - @m39_lib.M39	5D7 5D8 7C4 12C6
FSB_D_L<17>	FSB_D_L<17> - @m39_lib.M39	7C4 12C6
FSB_D_L<18>	FSB_D_L<18> - @m39_lib.M39	7B4 12C6
FSB_D_L<19>	FSB_D_L<19> - @m39_lib.M39	7B4 12C6
FSB_D_L<20>	FSB_D_L<20> - @m39_lib.M39	7B4 12C6
FSB_D_L<21>	FSB_D_L<21> - @m39_lib.M39	7B4 12C6
FSB_D_L<22>	FSB_D_L<22> - @m39_lib.M39	7B4 12C6
FSB_D_L<23>	FSB_D_L<23> - @m39_lib.M39	7B4 12C6
FSB_D_L<24>	FSB_D_L<24> - @m39_lib.M39	7B4 12C6
FSB_D_L<25>	FSB_D_L<25> - @m39_lib.M39	7B4 12C6
FSB_D_L<26>	FSB_D_L<26> - @m39_lib.M39	7B4 12C6
FSB_D_L<27>	FSB_D_L<27> - @m39_lib.M39	7B4 12C6
FSB_D_L<28>	FSB_D_L<28> - @m39_lib.M39	7B4 12C6
FSB_D_L<29>	FSB_D_L<29> - @m39_lib.M39	7B4 12C6
FSB_D_L<30>	FSB_D_L<30> - @m39_lib.M39	7B4 12C6
FSB_D_L<31>	FSB_D_L<31> - @m39_lib.M39	7B4 12C6
FSB_D_L<32>	FSB_D_L<32> - @m39_lib.M39	7C2 12C6
FSB_D_L<33>	FSB_D_L<33> - @m39_lib.M39	7C2 12C6
FSB_D_L<34>	FSB_D_L<34> - @m39_lib.M39	7C2 12C6
FSB_D_L<35>	FSB_D_L<35> - @m39_lib.M39	7C2 12C6
FSB_D_L<36>	FSB_D_L<36> - @m39_lib.M39	7C2 12C6
FSB_D_L<37>	FSB_D_L<37> - @m39_lib.M39	7C2 12C6
FSB_D_L<38>	FSB_D_L<38> - @m39_lib.M39	7C2 12C6
FSB_D_L<39>	FSB_D_L<39> - @m39_lib.M39	7C2 12B6
FSB_D_L<40>	FSB_D_L<40> - @m39_lib.M39	7C2 12B6
FSB_D_L<41>	FSB_D_L<41> - @m39_lib.M39	5D7 5D8 7C2 12B6
FSB_D_L<42>	FSB_D_L<42> - @m39_lib.M39	7C2 12B6
FSB_D_L<43>	FSB_D_L<43> - @m39_lib.M39	7C2 12B6
FSB_D_L<44>	FSB_D_L<44> - @m39_lib.M39	7C2 12B6
FSB_D_L<45>	FSB_D_L<45> - @m39_lib.M39	7C2 12B6
FSB_D_L<46>	FSB_D_L<46> - @m39_lib.M39	7C2 12B6
FSB_D_L<47>	FSB_D_L<47> - @m39_lib.M39	7C2 12B6
FSB_D_L<48>	FSB_D_L<48> - @m39_lib.M39	7C2 12B6
FSB_D_L<49>	FSB_D_L<49> - @m39_lib.M39	7C2 12B6
FSB_D_L<50>	FSB_D_L<50> - @m39_lib.M39	7B2 12B6
FSB_D_L<51>	FSB_D_L<51> - @m39_lib.M39	7B2 12B6
FSB_D_L<52>	FSB_D_L<52> - @m39_lib.M39	7B2 12B6
FSB_D_L<53>	FSB_D_L<53> - @m39_lib.M39	7B2 12B6
FSB_D_L<54>	FSB_D_L<54> - @m39_lib.M39	7B2 12B6
FSB_D_L<55>	FSB_D_L<55> - @m39_lib.M39	7B2 12B6
FSB_D_L<56>	FSB_D_L<56> - @m39_lib.M39	7B2 12B6
FSB_D_L<57>	FSB_D_L<57> - @m39_lib.M39	7B2 12B6
FSB_D_L<58>	FSB_D_L<58> - @m39_lib.M39	7B2 12B6
FSB_D_L<59>	FSB_D_L<59> - @m39_lib.M39	5D7 5D8 7B2 12B6
FSB_D_L<60>	FSB_D_L<60> - @m39_lib.M39	7B2 12B6
FSB_D_L<61>	FSB_D_L<61> - @m39_lib.M39	7B2 12B6
FSB_D_L<62>	FSB_D_L<62> - @m39_lib.M39	7B2 12B6
FSB_D_L<63>	FSB_D_L<63> - @m39_lib.M39	7B2 12B6
FSB_HITM_L	FSB_HITM_L - @m39_lib.M39	5C7 7D6 12B4
FSB_HIT_L	FSB_HIT_L - @m39_lib.M39	5C7 7D6 12B4
FSB_IERR_L	FSB_IERR_L - @m39_lib.M39	7D6
FSB_LOCK_L	FSB_LOCK_L - @m39_lib.M39	5D7 5D8 7D6 12B4
FSB_REQ_L<0>	FSB_REQ_L<0> - @m39_lib.M39	5C7 7D7 12B4
FSB_REQ_L<1>	FSB_REQ_L<1> - @m39_lib.M39	5C7 7D7 12B4
FSB_REQ_L<2>	FSB_REQ_L<2> - @m39_lib.M39	5C7 7D7 12A4
FSB_REQ_L<3>	FSB_REQ_L<3> - @m39_lib.M39	5C7 7D7 12A4
FSB_REQ_L<4>	FSB_REQ_L<4> - @m39_lib.M39	5C7 7D7 12A4
FSB_RS_L<0>	FSB_RS_L<0> - @m39_lib.M39	7D6 12A4
FSB_RS_L<1>	FSB_RS_L<1> - @m39_lib.M39	7D6 12A4
FSB_RS_L<2>	FSB_RS_L<2> - @m39_lib.M39	7D6 12A4
FSB_SLPCPU_L	FSB_SLPCPU_L - @m39_lib.M39	7A3 12A4
FSB_TRDY_L	FSB_TRDY_L - @m39_lib.M39	7D6 12A4
FWH_INIT_L	FWH_INIT_L - @m39_lib.M39	21C4 59C5 60C3
	SMC_CPU_INIT_3_3_L - @m39_lib.M39	58D5 59C6
FWH_MFG_MODE	FWH_MFG_MODE - @m39_lib.M39	23A6 23C5
FW_A_TPA_N	FW_A_TPA_N - @m39_lib.M39	44C3 46C8
	FW_PORT0_TPA_N - @m39_lib.M39	46C5 46C6
FW_A_TPA_P	FW_A_TPA_P - @m39_lib.M39	44C3 46C8
	FW_PORT0_TPA_P - @m39_lib.M39	46C5 46C6
FW_A_TPBIAS	FW_A_TPBIAS - @m39_lib.M39	44C4 46C8
FW_A_TPB_N	FW_A_TPB_N - @m39_lib.M39	44C3 46C8
	FW_PORT0_TPB_N - @m39_lib.M39	46C5 46C6
FW_A_TPB_P	FW_A_TPB_P - @m39_lib.M39	44C3 46C8
	FW_PORT0_TPB_P - @m39_lib.M39	46C5 46C6
FW_B_TPA_N	FW_B_TPA_N - @m39_lib.M39	44C3 46C8
	FW_PORT1_TPA_N - @m39_lib.M39	46B5 46C6
FW_B_TPA_P	FW_B_TPA_P - @m39_lib.M39	44C3 46C8
	FW_PORT1_TPA_P - @m39_lib.M39	46B5 46C6
FW_B_TPBIAS	FW_B_TPBIAS - @m39_lib.M39	44C4 46C8
FW_B_TPB_N	FW_B_TPB_N - @m39_lib.M39	44C3 46C8
	FW_PORT1_TPB_N - @m39_lib.M39	46B5 46C6
FW_B_TPB_P	FW_B_TPB_P - @m39_lib.M39	44C3 46C8
	FW_PORT1_TPB_P - @m39_lib.M39	46B5 46C6
FW_CARDBUS_L	FW_CARDBUS_L - @m39_lib.M39	44B5
FW_CONTENDER	FW_CONTENDER - @m39_lib.M39	44B3
FW_CPS	FW_CPS - @m39_lib.M39	44C3
FW_C_TPA_N	FW_C_TPA_N - @m39_lib.M39	44C3 46B8
	TP_FW_C_TPA_N - @m39_lib.M39	46B7
FW_C_TPA_P	FW_C_TPA_P - @m39_lib.M39	44C3 46B8
	TP_FW_C_TPA_P - @m39_lib.M39	46B7
FW_C_TPBIAS	FW_C_TPBIAS - @m39_lib.M39	44C4 46B8
	TP_FW_C_TPBIAS - @m39_lib.M39	46B7
FW_C_TPB_N	FW_C_TPB_N - @m39_lib.M39	44C3 46A8
	TP_FW_C_TPB_N - @m39_lib.M39	46A7
FW_C_TPB_P	FW_C_TPB_P - @m39_lib.M39	44C3 46A8
	TP_FW_C_TPB_P - @m39_lib.M39	46A7

FW_PC0	FW_PC0 - @m39_lib.M39	44B3
FW_PC1	FW_PC1 - @m39_lib.M39	44B3
FW_PC2	FW_PC2 - @m39_lib.M39	44B3
FW_PORT0_TPA_FL_N	FW_PORT0_TPA_FL_N - @m39_lib.M39	46C2
FW_PORT0_TPA_FL_P	FW_PORT0_TPA_FL_P - @m39_lib.M39	46C2
FW_PORT0_TPB_FL_N	FW_PORT0_TPB_FL_N - @m39_lib.M39	46C2
FW_PORT0_TPB_FL_P	FW_PORT0_TPB_FL_P - @m39_lib.M39	46C2
FW_PORT1_TPA_FL_N	FW_PORT1_TPA_FL_N - @m39_lib.M39	46B2
FW_PORT1_TPA_FL_P	FW_PORT1_TPA_FL_P - @m39_lib.M39	46B2
FW_PORT1_TPB_FL_N	FW_PORT1_TPB_FL_N - @m39_lib.M39	46B2
FW_PORT1_TPB_FL_P	FW_PORT1_TPB_FL_P - @m39_lib.M39	46B2
FW_R0	FW_R0 - @m39_lib.M39	44C4
FW_R1	FW_R1 - @m39_lib.M39	44C4
FW_RESET_L	FW_RESET_L - @m39_lib.M39	44C2 44C3
FW_ROM_CLK	FW_ROM_CLK - @m39_lib.M39	44B4
FW_SE	FW_SE - @m39_lib.M39	44B3
FW_SM	FW_SM - @m39_lib.M39	44B3
FW_TEST	FW_TEST - @m39_lib.M39	44B3
FW_TPA_C<0>	FW_TPA_C<0> - @m39_lib.M39	46B8
FW_TPA_C<1>	FW_TPA_C<1> - @m39_lib.M39	46B7
FW_VP	FW_VP - @m39_lib.M39	46D4
FW_VP_R	FW_VP_R - @m39_lib.M39	46D5
FW_XTAL_X0	FW_XTAL_X0 - @m39_lib.M39	44D2 44D3
FW_XTAL_XI	FW_XTAL_XI - @m39_lib.M39	44D2 44D3
FW_XTAL_XR	FW_XTAL_XR - @m39_lib.M39	44D2
GATE_3V3_S3	GATE_3V3_S3 - @m39_lib.M39	83B4
GATE_5V_S3	GATE_5V_S3 - @m39_lib.M39	83C4
GND_AUDIO	GND_AUDIO - @m39_lib.M39	6C2 74D2
GND_AUDIO_CODEC	GND_AUDIO_CODEC - @m39_lib.M39	68A6 68B7 68D2 72B8 72C8 73A8 73C2 73D4 74A3 74A5 74A6 74A7 74B5 74B7 74C1 74C2 74C8 74D1
GND_AUDIO_MIC_CONN	GND_AUDIO_MIC_CONN - @m39_lib.M39	47C2 73C4
GND_AUDIO_SPKRAMP	GND_AUDIO_SPKRAMP - @m39_lib.M39	6C2 72B1 74D2
GND_AUDIO_SPKRAMP_PLANE	GND_AUDIO_SPKRAMP_PLANE - @m39_lib.M39	72A6 72B2 72B6 72D2 72D8 74C2
GND_BNDI	GND_BNDI - @m39_lib.M39	47B2 47D2
GND_CHASSIS_AUDIO_EXTERNAL	GND_CHASSIS_AUDIO_EXTERNAL - @m39_lib.M39	6B2 73A8 73C7 73D8 74C1 74D2
	GND_CHASSIS_IO_LEFT - @m39_lib.M39	6B2
	GND_CHASSIS_USB - @m39_lib.M39	6B2 47A4 47B4 47C4
	GND_CHASSIS_IO_LEFT - @m39_lib.M39	6B2
GND_CHASSIS_AUDIO_INTERNAL	GND_CHASSIS_AUDIO_INTERNAL - @m39_lib.M39	6A2 73C6
	GND_CHASSIS_BNDI - @m39_lib.M39	6A2 47C2 47C2 47D2
GND_CHASSIS_FIREWIRE	GND_CHASSIS_FIREWIRE - @m39_lib.M39	6B2 46A1 46C1
	GND_CHASSIS_RJ45 - @m39_lib.M39	6B2 43C6
	GND_CHASSIS_VGA - @m39_lib.M39	6B2 97C4
	GND_CHASSIS_RJ45 - @m39_lib.M39	6B2 43C6
	GND_CHASSIS_IO_RIGHT - @m39_lib.M39	6B1
GND_CPU_ISENSE_OPAMP	GND_CPU_ISENSE_OPAMP - @m39_lib.M39	76D3
GND_GPUVCORE_SGND	GND_GPUVCORE_SGND - @m39_lib.M39	85C7
GND_GPU_A2VSSN	GND_GPU_A2VSSN - @m39_lib.M39	93B7
GND_GPU_A2VSSQ	GND_GPU_A2VSSQ - @m39_lib.M39	93B7
GND_GPU_AVSSN	GND_GPU_AVSSN - @m39_lib.M39	93C7
GND_GPU_AVSSQ	GND_GPU_AVSSQ - @m39_lib.M39	93C7
GND_GPU_LPVSS	GND_GPU_LPVSS - @m39_lib.M39	93B7
GND_GPU_LVSSR	GND_GPU_LVSSR - @m39_lib.M39	93A7
GND_GPU_MPVSS	GND_GPU_MPVSS - @m39_lib.M39	91A5
GND_GPU_PCIE_PVSS	GND_GPU_PCIE_PVSS - @m39_lib.M39	84B8
GND_GPU_PVSS	GND_GPU_PVSS - @m39_lib.M39	91A5
GND_GPU_TPVSS	GND_GPU_TPVSS - @m39_lib.M39	93C7
GND_GPU_TXVSSR	GND_GPU_TXVSSR - @m39_lib.M39	93C7
GND_GPU_VSSRH0	GND_GPU_VSSRH0 - @m39_lib.M39	87A7
GND_GPU_VSSRH1	GND_GPU_VSSRH1 - @m39_lib.M39	87A4
GND_IMVP6_SGND	GND_IMVP6_SGND - @m39_lib.M39	75A4 75B6 75B8 75D7
GND_NB_VSSA_LVDS	GND_NB_VSSA_LVDS - @m39_lib.M39	17C6 19C2
	TP_GND_NB_VSSA_LVDS - @m39_lib.M39	19C1
GND_NEXT_TO_SMC	GND_NEXT_TO_SMC - @m39_lib.M39	59B2 76C2
GND_SMC_AVSS	GND_SMC_AVSS - @m39_lib.M39	58B2 58C4 59A3 59B3 76B2 76B6 76C2 76C5 85C1
GND_USB_PORT0	GND_USB_PORT0 - @m39_lib.M39	47D5
GND_USB_PORT1	GND_USB_PORT1 - @m39_lib.M39	47C5
GND_USB_PORT2	GND_USB_PORT2 - @m39_lib.M39	47A5
GPUBBN_D	GPUBBN_D - @m39_lib.M39	85A3
GPUBBN_D_RC	GPUBBN_D_RC - @m39_lib.M39	85A3
GPUBBN_FB	GPUBBN_FB - @m39_lib.M39	85A3
GPUBBN_SW	GPUBBN_SW - @m39_lib.M39	85A4
GPUBBP_ADJ	GPUBBP_ADJ - @m39_lib.M39	85B7
GPUBBP_ADJ_LOW	GPUBBP_ADJ_LOW - @m39_lib.M39	85A7
GPUBB_EN	GPUBB_EN - @m39_lib.M39	85A4 85A6 85B8
GPUBB_EN_L	GPUBB_EN_L - @m39_lib.M39	85A1 85A5 85B7
GPUISENS_NEG	GPUISENS_NEG - @m39_lib.M39	85D3
GPUISENS_NTC	GPUISENS_NTC - @m39_lib.M39	85D3
GPUISENS_POS	GPUISENS_POS - @m39_lib.M39	85D3
GPUISENS_RC	GPUISENS_RC - @m39_lib.M39	85D3
GPUVCORE_BOOT	GPUVCORE_BOOT - @m39_lib.M39	85C5
GPUVCORE_COMP	GPUVCORE_COMP - @m39_lib.M39	85C7
GPUVCORE_COMP_R	GPUVCORE_COMP_R - @m39_lib.M39	85C7
GPUVCORE_EN	GPUVCORE_EN - @m39_lib.M39	85C8 88A8
GPUVCORE_FB	GPUVCORE_FB - @m39_lib.M39	85C7
GPUVCORE_FB_LOW	GPUVCORE_FB_LOW - @m39_lib.M39	85C3
GPUVCORE_FCCM	GPUVCORE_FCCM - @m39_lib.M39	85C7
GPUVCORE_FSET	GPUVCORE_FSET - @m39_lib.M39	85C7
GPUVCORE_IOUT	GPUVCORE_IOUT - @m39_lib.M39	59C5 85D1
	SMC_GPU_ISENSE - @m39_lib.M39	58D5 59C6
GPUVCORE_ISEN	GPUVCORE_ISEN - @m39_lib.M39	85C5
GPUVCORE_ISENSE_CAL	GPUVCORE_ISENSE_CAL - @m39_lib.M39	76A4
GPUVCORE_LG	GPUVCORE_LG - @m39_lib.M39	85C5
GPUVCORE_PGOOD	GPUVCORE_PGOOD - @m39_lib.M39	77A4 85C8
GPUVCORE_PHASE	GPUVCORE_PHASE - @m39_lib.M39	85C5
GPUVCORE_UG	GPUVCORE_UG - @m39_lib.M39	85C5
GPU_B2	GPU_B2 - @m39_lib.M39	93B3 97B8
GPU_BB_EN	GPU_BB_EN - @m39_lib.M39	85A7
GPU_CLK27M	GPU_CLK27M - @m39_lib.M39	92C6
	GPU_XTALIN - @m39_lib.M39	91A5 92C5
GPU_CLK100M_PCIE_N	GPU_CLK100M_PCIE_N - @m39_lib.M39	5C6 34A4 34B2 84A5
GPU_CLK100M_PCIE_P	GPU_CLK100M_PCIE_P - @m39_lib.M39	5C6 34A4 34B2 84A5
GPU_DDC_A_CLK	GPU_DDC_A_CLK - @m39_lib.M39	93A3 97D1
GPU_DDC_A_DATA	GPU_DDC_A_DATA - @m39_lib.M39	93A3 97C1
GPU_DDC_B_CLK	GPU_DDC_B_CLK - @m39_lib.M39	88B1 93A3
	TP_GPU_DDC_B_CLK - @m39_lib.M39	88B3
GPU_DDC_B_DATA	GPU_DDC_B_DATA - @m39_lib.M39	88B1 93A3
	TP_GPU_DDC_B_DATA - @m39_lib.M39	88B3
GPU_DDC_C_CLK	GPU_DDC_C_CLK - @m39_lib.M39	93A1 93A3 94A7 94C7
GPU_DDC_C_DATA	GPU_DDC_C_DATA - @m39_lib.M39	93A1 93A3 94A6 94C7
GPU_DIGON	GPU_DIGON - @m39_lib.M39	91C3 94C8
GPU_EXT_TDIODE_N	GPU_EXT_TDIODE_N - @m39_lib.M39	61B7
GPU_EXT_TDIODE_P	GPU_EXT_TDIODE_P - @m39_lib.M39	61C7
GPU_G2	GPU_G2 - @m39_lib.M39	93B3 97A8
GPU_GENERICA	GPU_GENERICA - @m39_lib.M39	91C3 95B4
	TP_GPU_GENERICA - @m39_lib.M39	95B6
GPU_GENERICB	GPU_GENERICB - @m39_lib.M39	91C3 95B4
	TP_GPU_GENERICB - @m39_lib.M39	95B6

GPU_GENERICC	GPU_GENERICC - @m39_lib.M39	91C3 95B4
	TP_GPU_GENERICC - @m39_lib.M39	95B6
GPU_GENERICD	GPU_GENERICD - @m39_lib.M39	85A7 91C3
GPU_GPIO_0	GPU_GPIO_0 - @m39_lib.M39	88D5 91D3 94C3
GPU_GPIO_1	GPU_GPIO_1 - @m39_lib.M39	88D5 91D3
GPU_GPIO_2	GPU_GPIO_2 - @m39_lib.M39	88D5 91D3
GPU_GPIO_3	GPU_GPIO_3 - @m39_lib.M39	88D5 91D3
GPU_GPIO_4	GPU_GPIO_4 - @m39_lib.M39	88C5 91D3
GPU_GPIO_5	GPU_GPIO_5 - @m39_lib.M39	88C5 91D3
GPU_GPIO_6	GPU_GPIO_6 - @m39_lib.M39	88C5 91D3
GPU_GPIO_7	GPU_GPIO_7 - @m39_lib.M39	88C3 91D3
	TP_GPU_GPIO_7 - @m39_lib.M39	88C5
GPU_GPIO_8	GPU_GPIO_8 - @m39_lib.M39	88C5 91D3
GPU_GPIO_9	GPU_GPIO_9 - @m39_lib.M39	88C5 91C3
GPU_GPIO_10	GPU_GPIO_10 - @m39_lib.M39	88C3 91C3
	NC_GPU_GPIO_10 - @m39_lib.M39	88C5
GPU_GPIO_11	GPU_GPIO_11 - @m39_lib.M39	88B5 91C3
GPU_GPIO_12	GPU_GPIO_12 - @m39_lib.M39	88C5 91C3
GPU_GPIO_13	GPU_GPIO_13 - @m39_lib.M39	88C5 91C3
GPU_GPIO_14	GPU_GPIO_14 - @m39_lib.M39	88C1 91C3
	TP_GPU_GPIO_14 - @m39_lib.M39	88C3
GPU_GPIO_15	GPU_GPIO_15 - @m39_lib.M39	88B4 91C3
	GPU_VCORE_LOW - @m39_lib.M39	85B4 88B5
GPU_GPIO_17	GPU_GPIO_17 - @m39_lib.M39	88C1 91C3
	TP_GPU_GPIO_17 - @m39_lib.M39	88C3
GPU_GPIO_18	GPU_GPIO_18 - @m39_lib.M39	91D5 95B4
GPU_GPIO_19	GPU_GPIO_19 - @m39_lib.M39	91D5 95B4
GPU_GPIO_20	GPU_GPIO_20 - @m39_lib.M39	91D5 95B4
GPU_GPIO_21	GPU_GPIO_21 - @m39_lib.M39	91D5 95B4
GPU_GPIO_22	GPU_GPIO_22 - @m39_lib.M39	91D5 95B4
GPU_GPIO_23	GPU_GPIO_23 - @m39_lib.M39	91D5 95B4
GPU_GPIO_24	GPU_GPIO_24 - @m39_lib.M39	88B5 91D5
GPU_GPIO_25	GPU_GPIO_25 - @m39_lib.M39	91D5 95C4
GPU_GPIO_26	GPU_GPIO_26 - @m39_lib.M39	91D5 95C4
GPU_GPIO_27	GPU_GPIO_27 - @m39_lib.M39	88B5 91D5
GPU_GPIO_28	GPU_GPIO_28 - @m39_lib.M39	88B5 91D5
GPU_GPIO_29	GPU_GPIO_29 - @m39_lib.M39	88B5 91C5
GPU_GPIO_30	GPU_GPIO_30 - @m39_lib.M39	91C5 95C4
GPU_GPIO_31	GPU_GPIO_31 - @m39_lib.M39	91C5 95C4
GPU_GPIO_32	GPU_GPIO_32 - @m39_lib.M39	91C5 95C4
GPU_GPIO_33	GPU_GPIO_33 - @m39_lib.M39	91C5 95C4
GPU_GPIO_34	GPU_GPIO_34 - @m39_lib.M39	91C5 95C4
GPU_H2SYNC	GPU_H2SYNC - @m39_lib.M39	93B3 97A4
GPU_HPD	GPU_HPD - @m39_lib.M39	93A5 97C1
GPU_HSYNC_BUF	GPU_HSYNC_BUF - @m39_lib.M39	97A4
GPU_MEMTEST	GPU_MEMTEST - @m39_lib.M39	87A3
GPU_MVREFD0	GPU_MVREFD0 - @m39_lib.M39	87B7
GPU_MVREFD1	GPU_MVREFD1 - @m39_lib.M39	87B3
GPU_MVREFS0	GPU_MVREFS0 - @m39_lib.M39	87B7
GPU_MVREFS1	GPU_MVREFS1 - @m39_lib.M39	87B3
GPU_PCIE_CALI	GPU_PCIE_CALI - @m39_lib.M39	84A3
GPU_PCIE_CALRN	GPU_PCIE_CALRN - @m39_lib.M39	84A3
GPU_PCIE_CALRP	GPU_PCIE_CALRP - @m39_lib.M39	84A3
GPU_PWM_RST_L	GPU_PWM_RST_L - @m39_lib.M39	6C7 94B3
GPU_R2	GPU_R2 - @m39_lib.M39	93B3 97A8
GPU_TEST_MCLK	GPU_TEST_MCLK - @m39_lib.M39	87A3
GPU_TEST_YCLK	GPU_TEST_YCLK - @m39_lib.M39	87A3
GPU_TV_C	GPU_TV_C - @m39_lib.M39	88B1 93B3
	TP_GPU_TV_C - @m39_lib.M39	88B3
GPU_TV_COMP	GPU_TV_COMP - @m39_lib.M39	88B1 93B3
	TP_GPU_TV_COMP - @m39_lib.M39	88B3
GPU_TV_Y	GPU_TV_Y - @m39_lib.M39	88B1 93B3
	TP_GPU_TV_Y - @m39_lib.M39	88B3
GPU_V2SYNC	GPU_V2SYNC - @m39_lib.M39	93B3 97B4
GPU_VARY_BL	GPU_VARY_BL - @m39_lib.M39	91C3 94B3
GPU_VCORE_HIGH	GPU_VCORE_HIGH - @m39_lib.M39	85A8 85B4
GPU_VCORE_HIGH_RC	GPU_VCORE_HIGH_RC - @m39_lib.M39	85B3
GPU_VGA_B	GPU_VGA_B - @m39_lib.M39	88C1 93C3
	TP_GPU_VGA_B - @m39_lib.M39	88C3
GPU_VGA_G	GPU_VGA_G - @m39_lib.M39	88C1 93C3
	TP_GPU_VGA_G - @m39_lib.M39	88C3
GPU_VGA_HSYNC	GPU_VGA_HSYNC - @m39_lib.M39	88B1 93B3
	TP_GPU_VGA_HSYNC - @m39_lib.M39	88B3
GPU_VGA_R	GPU_VGA_R - @m39_lib.M39	88C1 93C3
	TP_GPU_VGA_R - @m39_lib.M39	88C3
GPU_VGA_VSYNC	GPU_VGA_VSYNC - @m39_lib.M39	88B1 93B3
	TP_GPU_VGA_VSYNC - @m39_lib.M39	88B3
GPU_VSYNC_BUF	GPU_VSYNC_BUF - @m39_lib.M39	97A4
GPU_XTALOUT	GPU_XTALOUT - @m39_lib.M39	91A5
I2C_ALS_SCL	I2C_ALS_SCL - @m39_lib.M39	59B1 59C8
	SMB_A_S3_CLK - @m39_lib.M39	58B5 59B2 59D1
I2C_ALS_SDA	I2C_ALS_SDA - @m39_lib.M39	59B1 59C8
	SMB_A_S3_DATA - @m39_lib.M39	58B5 59B2 59D1
IDE_CSEL_PD	IDE_CSEL_PD - @m39_lib.M39	38C3
IDE_DASP_L	IDE_DASP_L - @m39_lib.M39	38C3
IDE_DASP_L_DS	IDE_DASP_L_DS - @m39_lib.M39	38B3
IDE_IOCS16_PU	IDE_IOCS16_PU - @m39_lib.M39	38C1
IDE_IRQ14	IDE_IRQ14 - @m39_lib.M39	21B6 38C4
IDE_PDA<0>	IDE_PDA<0> - @m39_lib.M39	21B5 38C3
IDE_PDA<1>	IDE_PDA<1> - @m39_lib.M39	21B5 38C3
IDE_PDA<2>	IDE_PDA<2> - @m39_lib.M39	21B5 38C1
IDE_PDCS1_L	IDE_PDCS1_L - @m39_lib.M39	21B5 38C3
IDE_PDCS3_L	IDE_PDCS3_L - @m39_lib.M39	21B5 38C1
IDE_PDD<0>	IDE_PDD<0> - @m39_lib.M39	21C5 38C3
IDE_PDD<1>	IDE_PDD<1> - @m39_lib.M39	21B5 38C3
IDE_PDD<2>	IDE_PDD<2> - @m39_lib.M39	21B5 38D3
IDE_PDD<3>	IDE_PDD<3> - @m39_lib.M39	21B5 38D3
IDE_PDD<4>	IDE_PDD<4> - @m39_lib.M39	21B5 38D3
IDE_PDD<5>	IDE_PDD<5> - @m39_lib.M39	21B5 38D3
IDE_PDD<6>	IDE_PDD<6> - @m39_lib.M39	21B5 38D3
IDE_PDD<7>	IDE_PDD<7> - @m39_lib.M39	21B5 38D3
IDE_PDD<8>	IDE_PDD<8> - @m39_lib.M39	21B5 38D1
IDE_PDD<9>	IDE_PDD<9> - @m39_lib.M39	5C8 21B5 38D1
IDE_PDD<10>	IDE_PDD<10> - @m39_lib.M39	21B5 38D1
IDE_PDD<11>	IDE_PDD<11> - @m39_lib.M39	21B5 38D1
IDE_PDD<12>	IDE_PDD<12> - @m39_lib.M39	21B5 38D1
IDE_PDD<13>	IDE_PDD<13> - @m39_lib.M39	21B5 38D1
IDE_PDD<14>	IDE_PDD<14> - @m39_lib.M39	21B5 38D1
IDE_PDD<15>	IDE_PDD<15> - @m39_lib.M39	21B5 38C1
IDE_PDDACK_L	IDE_PDDACK_L - @m39_lib.M39	21B6 38C1
IDE_PDDREQ	IDE_PDDREQ - @m39_lib.M39	21B6 38C4
IDE_PDIORDY	IDE_PDIORDY - @m39_lib.M39	5C8 21B6 38C4
IDE_PDIOR_L	IDE_PDIOR_L - @m39_lib.M39	5C8 21B6 38C1
IDE_PDIOW_L	IDE_PDIOW_L - @m39_lib.M39	21B6 38C3
IDE_RESET_L	IDE_RESET_L - @m39_lib.M39	23C3 38D3 38D5
IMVP6_BOOT1	IMVP6_BOOT1 - @m39_lib.M39	75A8 75C5
IMVP6_BOOT2	IMVP6_BOOT2 - @m39_lib.M39	75A6 75C5
IMVP6_COMP	IMVP6_COMP - @m39_lib.M39	75A4 75B6
IMVP6_COMP_RC	IMVP6_COMP_RC - @m39_lib.M39	75B7
IMVP6_DFB	IMVP6_DFB - @m39_lib.M39	75A4 75B5
IMVP6_DROOP	IMVP6_DROOP - @m39_lib.M39	75A4 75B4 76D5
IMVP6_DROOP_R	IMVP6_DROOP_R - @m39_lib.M39	76D4
IMVP6_FB	IMVP6_FB - @m39_lib.M39	75A4 75B6
IMVP6_FB2	IMVP6_FB2 - @m39_lib.M39	75A4 75B6

www.teknisi-indonesia.com

IMVP6_FET_RC1	IMVP6_FET_RC1 - @m39_lib.M39	75A8 75C2
IMVP6_FET_RC2	IMVP6_FET_RC2 - @m39_lib.M39	75A6 75B2
IMVP6_ISEN1	IMVP6_ISEN1 - @m39_lib.M39	75A8 75C5
IMVP6_ISEN2	IMVP6_ISEN2 - @m39_lib.M39	75A6 75C5
IMVP6_LGATE1	IMVP6_LGATE1 - @m39_lib.M39	75A8 75C5
IMVP6_LGATE2	IMVP6_LGATE2 - @m39_lib.M39	75A6 75C5
IMVP6_NTC	IMVP6_NTC - @m39_lib.M39	75C7
IMVP6_NTC_R	IMVP6_NTC_R - @m39_lib.M39	75C7
IMVP6_OCSET	IMVP6_OCSET - @m39_lib.M39	75A4 75B5
IMVP6_PHASE1	IMVP6_PHASE1 - @m39_lib.M39	75A8 75C5
IMVP6_PHASE2	IMVP6_PHASE2 - @m39_lib.M39	75A6 75C5
IMVP6_RBIAS	IMVP6_RBIAS - @m39_lib.M39	75A4 75B6
IMVP6_RTN	IMVP6_RTN - @m39_lib.M39	75A4 75B5
IMVP6_SOFT	IMVP6_SOFT - @m39_lib.M39	75A4 75C6
IMVP6_UGATE1	IMVP6_UGATE1 - @m39_lib.M39	75A8 75C5
IMVP6_UGATE2	IMVP6_UGATE2 - @m39_lib.M39	75A6 75C5
IMVP6_VDIFF	IMVP6_VDIFF - @m39_lib.M39	75A4 75B6
IMVP6_VDIFF_RC	IMVP6_VDIFF_RC - @m39_lib.M39	75B7
IMVP6_VO	IMVP6_VO - @m39_lib.M39	75A4 75B4 76D5
IMVP6_VO_R	IMVP6_VO_R - @m39_lib.M39	75B4
IMVP6_VO_R_OA	IMVP6_VO_R_OA - @m39_lib.M39	76D4
IMVP6_VR_TT	IMVP6_VR_TT - @m39_lib.M39	75C7
IMVP6_VSEN	IMVP6_VSEN - @m39_lib.M39	75A4 75B5
IMVP6_VSUM	IMVP6_VSUM - @m39_lib.M39	75A4 75C5
IMVP6_VSUM_R1	IMVP6_VSUM_R1 - @m39_lib.M39	75A8 75C2
IMVP6_VSUM_R2	IMVP6_VSUM_R2 - @m39_lib.M39	75A6 75B2
IMVP6_VW	IMVP6_VW - @m39_lib.M39	75A4 75B6
IMVP_DPRSLPVR	IMVP_DPRSLPVR - @m39_lib.M39	75C6
IMVP_PGD_IN	IMVP_PGD_IN - @m39_lib.M39	75C6 77C7
IMVP_VID<0>	IMVP_VID<0> - @m39_lib.M39	75C6
IMVP_VID<1>	IMVP_VID<1> - @m39_lib.M39	75C7
IMVP_VID<2>	IMVP_VID<2> - @m39_lib.M39	75C7
IMVP_VID<3>	IMVP_VID<3> - @m39_lib.M39	75C7
IMVP_VID<4>	IMVP_VID<4> - @m39_lib.M39	75C7
IMVP_VID<5>	IMVP_VID<5> - @m39_lib.M39	75C7
IMVP_VID<6>	IMVP_VID<6> - @m39_lib.M39	75C7
IMVP_VR_ON	IMVP_VR_ON - @m39_lib.M39	58D7 75C6
INT_PIRQA_L	INT_PIRQA_L - @m39_lib.M39	22A7 26D2
INT_PIRQB_L	INT_PIRQB_L - @m39_lib.M39	22A7 26D2
INT_PIRQC_L	INT_PIRQC_L - @m39_lib.M39	22A7 26D2
INT_PIRQD_L	INT_PIRQD_L - @m39_lib.M39	22A7 26D2 44B5
INT_SERIRQ	INT_SERIRQ - @m39_lib.M39	23C8 58C7 60C3 67C6
ISENSE_CAL_EN	ISENSE_CAL_EN - @m39_lib.M39	58B7 76A8
ISENSE_CAL_EN_L	ISENSE_CAL_EN_L - @m39_lib.M39	76B7
ISENSE_CAL_EN_LS12V	ISENSE_CAL_EN_LS12V - @m39_lib.M39	76B6
ISENSE_CAL_EN_L_R	ISENSE_CAL_EN_L_R - @m39_lib.M39	76A7
ITPRESET_L	ITPRESET_L - @m39_lib.M39	11B3
ITP_TDO	ITP_TDO - @m39_lib.M39	11B3
ITS_ALIVE	ITS_ALIVE - @m39_lib.M39	6A7
ITS_PLUGGED_IN	ITS_PLUGGED_IN - @m39_lib.M39	6A8
ITS_RUNNING	ITS_RUNNING - @m39_lib.M39	6A6
JDREF	JDREF - @m39_lib.M39	68C4
KBC_MDE	KBC_MDE - @m39_lib.M39	58C2
LCD_PWM	LCD_PWM - @m39_lib.M39	6D8 94B1
LCD_PWM_R	LCD_PWM_R - @m39_lib.M39	94B2
LCD_PWREN_L	LCD_PWREN_L - @m39_lib.M39	94C8
LCD_PWREN_L_RC	LCD_PWREN_L_RC - @m39_lib.M39	94C7
LED4300_1	LED4300_1 - @m39_lib.M39	43D2
LED4301_1	LED4301_1 - @m39_lib.M39	43D1
LED4302_1	LED4302_1 - @m39_lib.M39	43D1
LED4303_1	LED4303_1 - @m39_lib.M39	43D1
LED_PP1V05_S0_N	LED_PP1V05_S0_N - @m39_lib.M39	81A4
LED_PP1V05_S0_P	LED_PP1V05_S0_P - @m39_lib.M39	81A4
LED_PP1V5_S0_N	LED_PP1V5_S0_N - @m39_lib.M39	80A3
LED_PP1V5_S0_P	LED_PP1V5_S0_P - @m39_lib.M39	80A4
LED_PP1V8_S3_N	LED_PP1V8_S3_N - @m39_lib.M39	79A4
LED_PP1V8_S3_P	LED_PP1V8_S3_P - @m39_lib.M39	79A4
LPC_AD<0>	LPC_AD<0> - @m39_lib.M39	21D4 58D7 60C6 67C6
LPC_AD<1>	LPC_AD<1> - @m39_lib.M39	21D4 58D7 60C6 67C6
LPC_AD<2>	LPC_AD<2> - @m39_lib.M39	21D4 58C7 60C3 67C6
LPC_AD<3>	LPC_AD<3> - @m39_lib.M39	21D4 58C7 60C3 67C6
LPC_FRAME_L	LPC_FRAME_L - @m39_lib.M39	21C5 58C7 60C6 67C6
LVDS_A_CLK_N	LVDS_A_CLK_N - @m39_lib.M39	13D5 19D2
	TP_LVDS_A_CLK_N - @m39_lib.M39	19D1
LVDS_A_CLK_P	LVDS_A_CLK_P - @m39_lib.M39	13C5 19D2
	TP_LVDS_A_CLK_P - @m39_lib.M39	19D1
LVDS_A_DATA_N<0>	LVDS_A_DATA_N<0> - @m39_lib.M39	13C5 19D2
LVDS_A_DATA_N<1>	LVDS_A_DATA_N<1> - @m39_lib.M39	13C5 19D2
LVDS_A_DATA_N<2>	LVDS_A_DATA_N<2> - @m39_lib.M39	13C5 19D2
LVDS_A_DATA_P<0>	LVDS_A_DATA_P<0> - @m39_lib.M39	13C5 19D2
LVDS_A_DATA_P<1>	LVDS_A_DATA_P<1> - @m39_lib.M39	13C5 19D2
LVDS_A_DATA_P<2>	LVDS_A_DATA_P<2> - @m39_lib.M39	13C5 19D2
LVDS_BKLTCTL	LVDS_BKLTCTL - @m39_lib.M39	13D5 19C2
	TP_LVDS_BKLTCTL - @m39_lib.M39	19C1
LVDS_BKLTEN	LVDS_BKLTEN - @m39_lib.M39	13D5 19C2
	TP_LVDS_BKLTEN - @m39_lib.M39	19C1
LVDS_B_CLK_N	LVDS_B_CLK_N - @m39_lib.M39	13C5 19D2
	TP_LVDS_B_CLK_N - @m39_lib.M39	19D1
LVDS_B_CLK_P	LVDS_B_CLK_P - @m39_lib.M39	13C5 19D2
	TP_LVDS_B_CLK_P - @m39_lib.M39	19D1
LVDS_B_DATA_N<0>	LVDS_B_DATA_N<0> - @m39_lib.M39	13C5 19D2
LVDS_B_DATA_N<1>	LVDS_B_DATA_N<1> - @m39_lib.M39	13C5 19D2
LVDS_B_DATA_N<2>	LVDS_B_DATA_N<2> - @m39_lib.M39	13C5 19D2
LVDS_B_DATA_P<0>	LVDS_B_DATA_P<0> - @m39_lib.M39	13C5 19D2
LVDS_B_DATA_P<1>	LVDS_B_DATA_P<1> - @m39_lib.M39	13C5 19D2
LVDS_B_DATA_P<2>	LVDS_B_DATA_P<2> - @m39_lib.M39	13C5 19D2
LVDS_CLKCTLA	LVDS_CLKCTLA - @m39_lib.M39	13D5 19C2
	TP_LVDS_CLKCTLA - @m39_lib.M39	19C1
LVDS_CLKCTLB	LVDS_CLKCTLB - @m39_lib.M39	13D5 19C2
	TP_LVDS_CLKCTLB - @m39_lib.M39	19C1
LVDS_DDC_CLK	LVDS_DDC_CLK - @m39_lib.M39	13D5 19C2
	TP_LVDS_DDC_CLK - @m39_lib.M39	19C1
LVDS_DDC_DATA	LVDS_DDC_DATA - @m39_lib.M39	13D5 19C2
	TP_LVDS_DDC_DATA - @m39_lib.M39	19C1
LVDS_IBG	LVDS_IBG - @m39_lib.M39	13D5 19C2
	TP_LVDS_IBG - @m39_lib.M39	19C1
LVDS_L_CLK_N	LVDS_L_CLK_N - @m39_lib.M39	93A3 93D2 94A6
LVDS_L_CLK_P	LVDS_L_CLK_P - @m39_lib.M39	93A3 93D2 94A7
LVDS_L_DATA_N<0>	LVDS_L_DATA_N<0> - @m39_lib.M39	93A3 93C2 94A6
LVDS_L_DATA_N<1>	LVDS_L_DATA_N<1> - @m39_lib.M39	93A3 93C2 94A7
LVDS_L_DATA_N<2>	LVDS_L_DATA_N<2> - @m39_lib.M39	93A3 93C2 94A6
LVDS_L_DATA_N<3>	LVDS_L_DATA_N<3> - @m39_lib.M39	93A3 94A6
LVDS_L_DATA_P<0>	LVDS_L_DATA_P<0> - @m39_lib.M39	93A3 93D2 94A7
LVDS_L_DATA_P<1>	LVDS_L_DATA_P<1> - @m39_lib.M39	93A3 93C2 94A6
LVDS_L_DATA_P<2>	LVDS_L_DATA_P<2> - @m39_lib.M39	93A3 93C2 94A7
LVDS_L_DATA_P<3>	LVDS_L_DATA_P<3> - @m39_lib.M39	93A3 94A7
LVDS_U_CLK_N	LVDS_U_CLK_N - @m39_lib.M39	93B3 94B6
LVDS_U_CLK_P	LVDS_U_CLK_P - @m39_lib.M39	93B3 94A7
LVDS_U_DATA_N<0>	LVDS_U_DATA_N<0> - @m39_lib.M39	93B3 94B7
LVDS_U_DATA_N<1>	LVDS_U_DATA_N<1> - @m39_lib.M39	93B3 94B7
LVDS_U_DATA_N<2>	LVDS_U_DATA_N<2> - @m39_lib.M39	93B3 94B7
LVDS_U_DATA_N<3>	LVDS_U_DATA_N<3> - @m39_lib.M39	93B3 94A6
LVDS_U_DATA_P<0>	LVDS_U_DATA_P<0> - @m39_lib.M39	93B3 94B6
LVDS_U_DATA_P<1>	LVDS_U_DATA_P<1> - @m39_lib.M39	93B3 94B6

LVDS_U_DATA_P<2>	LVDS_U_DATA_P<2> - @m39_lib.M39	93B3 94B6
LVDS_U_DATA_P<3>	LVDS_U_DATA_P<3> - @m39_lib.M39	93B3 94A7
LVDS_VDDEN	LVDS_VDDEN - @m39_lib.M39	13D5 19C2
	TP_LVDS_VDDEN - @m39_lib.M39	19C1
LVDS_VREFH	LVDS_VREFH - @m39_lib.M39	13D5 19C2
	TP_LVDS_VREFH - @m39_lib.M39	19C1
LVDS_VREFL	LVDS_VREFL - @m39_lib.M39	13D5 19C2
	TP_LVDS_VREFL - @m39_lib.M39	19C1
MEMVTT_VREF	MEMVTT_VREF - @m39_lib.M39	31B4
MEM_A_A<0>	MEM_A_A<0> - @m39_lib.M39	15C5 28B3
MEM_A_A<13..0>	MEM_A_A<13..0> - @m39_lib.M39	30C6
MEM_A_A<1>	MEM_A_A<1> - @m39_lib.M39	15C5 28B6
MEM_A_A<2>	MEM_A_A<2> - @m39_lib.M39	15C5 28B3
MEM_A_A<3>	MEM_A_A<3> - @m39_lib.M39	15B5 28B6
MEM_A_A<4>	MEM_A_A<4> - @m39_lib.M39	15B5 28B3
MEM_A_A<5>	MEM_A_A<5> - @m39_lib.M39	15B5 28B6
MEM_A_A<6>	MEM_A_A<6> - @m39_lib.M39	15B5 28C3
MEM_A_A<7>	MEM_A_A<7> - @m39_lib.M39	15B5 28C3
MEM_A_A<8>	MEM_A_A<8> - @m39_lib.M39	15B5 28C6
MEM_A_A<9>	MEM_A_A<9> - @m39_lib.M39	15B5 28C6
MEM_A_A<10>	MEM_A_A<10> - @m39_lib.M39	15B5 28B6
MEM_A_A<11>	MEM_A_A<11> - @m39_lib.M39	15B5 28C3
MEM_A_A<12>	MEM_A_A<12> - @m39_lib.M39	15B5 28C6
MEM_A_A<13>	MEM_A_A<13> - @m39_lib.M39	15B5 28B3
MEM_A_BS<0>	MEM_A_BS<0> - @m39_lib.M39	15D5 28B6
MEM_A_BS<2..0>	MEM_A_BS<2..0> - @m39_lib.M39	30C6
MEM_A_BS<1>	MEM_A_BS<1> - @m39_lib.M39	15D5 28B3
MEM_A_BS<2>	MEM_A_BS<2> - @m39_lib.M39	15D5 28C6
MEM_A_CAS_L	MEM_A_CAS_L - @m39_lib.M39	15D5 28B6 30B6
MEM_A_DM<0>	MEM_A_DM<0> - @m39_lib.M39	15D5 28D3
MEM_A_DM<1>	MEM_A_DM<1> - @m39_lib.M39	15D5 28D3
MEM_A_DM<2>	MEM_A_DM<2> - @m39_lib.M39	15D5 28C3
MEM_A_DM<3>	MEM_A_DM<3> - @m39_lib.M39	15C5 28C6
MEM_A_DM<4>	MEM_A_DM<4> - @m39_lib.M39	15C5 28B3
MEM_A_DM<5>	MEM_A_DM<5> - @m39_lib.M39	15C5 28A6
MEM_A_DM<6>	MEM_A_DM<6> - @m39_lib.M39	15C5 28A3
MEM_A_DM<7>	MEM_A_DM<7> - @m39_lib.M39	15C5 28A6
MEM_A_DQ<0>	MEM_A_DQ<0> - @m39_lib.M39	15D7 28D6
MEM_A_DQ<1>	MEM_A_DQ<1> - @m39_lib.M39	15D7 28D6
MEM_A_DQ<2>	MEM_A_DQ<2> - @m39_lib.M39	15D7 28D6
MEM_A_DQ<3>	MEM_A_DQ<3> - @m39_lib.M39	15D7 28D6
MEM_A_DQ<4>	MEM_A_DQ<4> - @m39_lib.M39	15D7 28D3
MEM_A_DQ<5>	MEM_A_DQ<5> - @m39_lib.M39	15D7 28D3
MEM_A_DQ<6>	MEM_A_DQ<6> - @m39_lib.M39	15D7 28D3
MEM_A_DQ<7>	MEM_A_DQ<7> - @m39_lib.M39	5B7 15D7 28D3
MEM_A_DQ<8>	MEM_A_DQ<8> - @m39_lib.M39	15C7 28D6
MEM_A_DQ<9>	MEM_A_DQ<9> - @m39_lib.M39	15C7 28D6
MEM_A_DQ<10>	MEM_A_DQ<10> - @m39_lib.M39	15C7 28D6
MEM_A_DQ<11>	MEM_A_DQ<11> - @m39_lib.M39	15C7 28D6
MEM_A_DQ<12>	MEM_A_DQ<12> - @m39_lib.M39	15C7 28D3
MEM_A_DQ<13>	MEM_A_DQ<13> - @m39_lib.M39	15C7 28D3
MEM_A_DQ<14>	MEM_A_DQ<14> - @m39_lib.M39	5B7 15C7 28D3
MEM_A_DQ<15>	MEM_A_DQ<15> - @m39_lib.M39	15C7 28D3
MEM_A_DQ<16>	MEM_A_DQ<16> - @m39_lib.M39	5B7 15C7 28C6
MEM_A_DQ<17>	MEM_A_DQ<17> - @m39_lib.M39	15C7 28C6
MEM_A_DQ<18>	MEM_A_DQ<18> - @m39_lib.M39	15C7 28C6
MEM_A_DQ<19>	MEM_A_DQ<19> - @m39_lib.M39	15C7 28C6
MEM_A_DQ<20>	MEM_A_DQ<20> - @m39_lib.M39	15C7 28C3
MEM_A_DQ<21>	MEM_A_DQ<21> - @m39_lib.M39	15C7 28C3
MEM_A_DQ<22>	MEM_A_DQ<22> - @m39_lib.M39	15C7 28C3
MEM_A_DQ<23>	MEM_A_DQ<23> - @m39_lib.M39	15C7 28C3
MEM_A_DQ<24>	MEM_A_DQ<24> - @m39_lib.M39	15C7 28C6
MEM_A_DQ<25>	MEM_A_DQ<25> - @m39_lib.M39	5B7 15C7 28C6
MEM_A_DQ<26>	MEM_A_DQ<26> - @m39_lib.M39	15C7 28C6
MEM_A_DQ<27>	MEM_A_DQ<27> - @m39_lib.M39	15C7 28C6
MEM_A_DQ<28>	MEM_A_DQ<28> - @m39_lib.M39	15C7 28C3
MEM_A_DQ<29>	MEM_A_DQ<29> - @m39_lib.M39	15C7 28C3
MEM_A_DQ<30>	MEM_A_DQ<30> - @m39_lib.M39	15C7 28C3
MEM_A_DQ<31>	MEM_A_DQ<31> - @m39_lib.M39	15C7 28C3
MEM_A_DQ<32>	MEM_A_DQ<32> - @m39_lib.M39	15C7 28B6
MEM_A_DQ<33>	MEM_A_DQ<33> - @m39_lib.M39	15C7 28B6
MEM_A_DQ<34>	MEM_A_DQ<34> - @m39_lib.M39	15B7 28B6
MEM_A_DQ<35>	MEM_A_DQ<35> - @m39_lib.M39	15B7 28B6
MEM_A_DQ<36>	MEM_A_DQ<36> - @m39_lib.M39	15B7 28B3
MEM_A_DQ<37>	MEM_A_DQ<37> - @m39_lib.M39	15B7 28B3
MEM_A_DQ<38>	MEM_A_DQ<38> - @m39_lib.M39	15B7 28B3
MEM_A_DQ<39>	MEM_A_DQ<39> - @m39_lib.M39	5B7 15B7 28B3
MEM_A_DQ<40>	MEM_A_DQ<40> - @m39_lib.M39	15B7 28B6
MEM_A_DQ<41>	MEM_A_DQ<41> - @m39_lib.M39	15B7 28B6
MEM_A_DQ<42>	MEM_A_DQ<42> - @m39_lib.M39	15B7 28A6
MEM_A_DQ<43>	MEM_A_DQ<43> - @m39_lib.M39	15B7 28A6
MEM_A_DQ<44>	MEM_A_DQ<44> - @m39_lib.M39	15B7 28B3
MEM_A_DQ<45>	MEM_A_DQ<45> - @m39_lib.M39	15B7 28B3
MEM_A_DQ<46>	MEM_A_DQ<46> - @m39_lib.M39	15B7 28A3
MEM_A_DQ<47>	MEM_A_DQ<47> - @m39_lib.M39	5B7 15B7 28A3
MEM_A_DQ<48>	MEM_A_DQ<48> - @m39_lib.M39	15B7 28A6
MEM_A_DQ<49>	MEM_A_DQ<49> - @m39_lib.M39	15B7 28A6
MEM_A_DQ<50>	MEM_A_DQ<50> - @m39_lib.M39	15B7 28A6
MEM_A_DQ<51>	MEM_A_DQ<51> - @m39_lib.M39	15B7 28A6
MEM_A_DQ<52>	MEM_A_DQ<52> - @m39_lib.M39	15B7 28A3
MEM_A_DQ<53>	MEM_A_DQ<53> - @m39_lib.M39	15B7 28A3
MEM_A_DQ<54>	MEM_A_DQ<54> - @m39_lib.M39	5B7 15B7 28A3
MEM_A_DQ<55>	MEM_A_DQ<55> - @m39_lib.M39	15B7 28A3
MEM_A_DQ<56>	MEM_A_DQ<56> - @m39_lib.M39	15B7 28A6
MEM_A_DQ<57>	MEM_A_DQ<57> - @m39_lib.M39	15B7 28A6
MEM_A_DQ<58>	MEM_A_DQ<58> - @m39_lib.M39	15B7 28A6
MEM_A_DQ<59>	MEM_A_DQ<59> - @m39_lib.M39	5B7 15B7 28A6
MEM_A_DQ<60>	MEM_A_DQ<60> - @m39_lib.M39	15A7 28A3
MEM_A_DQ<61>	MEM_A_DQ<61> - @m39_lib.M39	15A7 28A3
MEM_A_DQ<62>	MEM_A_DQ<62> - @m39_lib.M39	15A7 28A3
MEM_A_DQ<63>	MEM_A_DQ<63> - @m39_lib.M39	15A7 28A3
MEM_A_DQS_N<0>	MEM_A_DQS_N<0> - @m39_lib.M39	5B7 15C5 28D6
MEM_A_DQS_N<1>	MEM_A_DQS_N<1> - @m39_lib.M39	5B7 15C5 28D6
MEM_A_DQS_N<2>	MEM_A_DQS_N<2> - @m39_lib.M39	5B7 15C5 28C6
MEM_A_DQS_N<3>	MEM_A_DQS_N<3> - @m39_lib.M39	5B7 15C5 28C3
MEM_A_DQS_N<4>	MEM_A_DQS_N<4> - @m39_lib.M39	5B7 15C5 28B6
MEM_A_DQS_N<5>	MEM_A_DQS_N<5> - @m39_lib.M39	5B7 15C5 28B3
MEM_A_DQS_N<6>	MEM_A_DQS_N<6> - @m39_lib.M39	5B7 15C5 28A6
MEM_A_DQS_N<7>	MEM_A_DQS_N<7> - @m39_lib.M39	5B7 15C5 28A3
MEM_A_DQS_P<0>	MEM_A_DQS_P<0> - @m39_lib.M39	5B7 15C5 28D6
MEM_A_DQS_P<1>	MEM_A_DQS_P<1> - @m39_lib.M39	5B7 15C5 28D6
MEM_A_DQS_P<2>	MEM_A_DQS_P<2> - @m39_lib.M39	5B7 15C5 28C6
MEM_A_DQS_P<3>	MEM_A_DQS_P<3> - @m39_lib.M39	5B7 15C5 28C3
MEM_A_DQS_P<4>	MEM_A_DQS_P<4> - @m39_lib.M39	5B7 15C5 28B6
MEM_A_DQS_P<5>	MEM_A_DQS_P<5> - @m39_lib.M39	5B7 15C5 28A3
MEM_A_DQS_P<6>	MEM_A_DQS_P<6> - @m39_lib.M39	5B7 15C5 28A6
MEM_A_DQS_P<7>	MEM_A_DQS_P<7> - @m39_lib.M39	5B7 15C5 28A3
MEM_A_RAS_L	MEM_A_RAS_L - @m39_lib.M39	15B5 28B3 30B6
MEM_A_WE_L	MEM_A_WE_L - @m39_lib.M39	15B5 28B6 30B6
MEM_B_A<0>	MEM_B_A<0> - @m39_lib.M39	15C2 29B3 30B5
MEM_B_A<1>	MEM_B_A<1> - @m39_lib.M39	15C2 29B6 30B5
MEM_B_A<2>	MEM_B_A<2> - @m39_lib.M39	15C2 29B3 30B5
MEM_B_A<3>	MEM_B_A<3> - @m39_lib.M39	15B2 29B6 30B5
MEM_B_A<4>	MEM_B_A<4> - @m39_lib.M39	15B2 29B3 30B5

MEM_B_A<5>	MEM_B_A<5> - @m39_lib.M39	15B2 29B6 30B5
MEM_B_A<6>	MEM_B_A<6> - @m39_lib.M39	15B2 29C3 30B5
MEM_B_A<7>	MEM_B_A<7> - @m39_lib.M39	15B2 29C3 30B5
MEM_B_A<8>	MEM_B_A<8> - @m39_lib.M39	15B2 29C6 30B5
MEM_B_A<9>	MEM_B_A<9> - @m39_lib.M39	15B2 29C6 30B5
MEM_B_A<10>	MEM_B_A<10> - @m39_lib.M39	15B2 29B6 30B5
MEM_B_A<11>	MEM_B_A<11> - @m39_lib.M39	15B2 29C3 30A5
MEM_B_A<12>	MEM_B_A<12> - @m39_lib.M39	15B2 29C6 30A5
MEM_B_A<13>	MEM_B_A<13> - @m39_lib.M39	15B2 29B3 30A5
MEM_B_BS<0>	MEM_B_BS<0> - @m39_lib.M39	15D2 29B6
MEM_B_BS<2..0>	MEM_B_BS<2..0> - @m39_lib.M39	30A6
MEM_B_BS<1>	MEM_B_BS<1> - @m39_lib.M39	15D2 29B3
MEM_B_BS<2>	MEM_B_BS<2> - @m39_lib.M39	15D2 29C6
MEM_B_CAS_L	MEM_B_CAS_L - @m39_lib.M39	15D2 29B6 30A6
MEM_B_DM<0>	MEM_B_DM<0> - @m39_lib.M39	15D2 29D3
MEM_B_DM<1>	MEM_B_DM<1> - @m39_lib.M39	15D2 29D3
MEM_B_DM<2>	MEM_B_DM<2> - @m39_lib.M39	15D2 29C3
MEM_B_DM<3>	MEM_B_DM<3> - @m39_lib.M39	15C2 29C6
MEM_B_DM<4>	MEM_B_DM<4> - @m39_lib.M39	15C2 29B3
MEM_B_DM<5>	MEM_B_DM<5> - @m39_lib.M39	15C2 29A6
MEM_B_DM<6>	MEM_B_DM<6> - @m39_lib.M39	15C2 29A3
MEM_B_DM<7>	MEM_B_DM<7> - @m39_lib.M39	15C2 29A6
MEM_B_DQ<0>	MEM_B_DQ<0> - @m39_lib.M39	15D4 29D6
MEM_B_DQ<1>	MEM_B_DQ<1> - @m39_lib.M39	15D4 29D6
MEM_B_DQ<2>	MEM_B_DQ<2> - @m39_lib.M39	15D4 29D6
MEM_B_DQ<3>	MEM_B_DQ<3> - @m39_lib.M39	15D4 29D6
MEM_B_DQ<4>	MEM_B_DQ<4> - @m39_lib.M39	15D4 29D3
MEM_B_DQ<5>	MEM_B_DQ<5> - @m39_lib.M39	15D4 29D3
MEM_B_DQ<6>	MEM_B_DQ<6> - @m39_lib.M39	5A7 15D4 29D3
MEM_B_DQ<7>	MEM_B_DQ<7> - @m39_lib.M39	15D4 29D3
MEM_B_DQ<8>	MEM_B_DQ<8> - @m39_lib.M39	5A7 15C4 29D6
MEM_B_DQ<9>	MEM_B_DQ<9> - @m39_lib.M39	15C4 29D6
MEM_B_DQ<10>	MEM_B_DQ<10> - @m39_lib.M39	15C4 29D6
MEM_B_DQ<11>	MEM_B_DQ<11> - @m39_lib.M39	15C4 29D6
MEM_B_DQ<12>	MEM_B_DQ<12> - @m39_lib.M39	15C4 29D3
MEM_B_DQ<13>	MEM_B_DQ<13> - @m39_lib.M39	15C4 29D3
MEM_B_DQ<14>	MEM_B_DQ<14> - @m39_lib.M39	15C4 29D3
MEM_B_DQ<15>	MEM_B_DQ<15> - @m39_lib.M39	15C4 29D3
MEM_B_DQ<16>	MEM_B_DQ<16> - @m39_lib.M39	15C4 29C6
MEM_B_DQ<17>	MEM_B_DQ<17> - @m39_lib.M39	15C4 29C6
MEM_B_DQ<18>	MEM_B_DQ<18> - @m39_lib.M39	15C4 29C6
MEM_B_DQ<19>	MEM_B_DQ<19> - @m39_lib.M39	15C4 29C6
MEM_B_DQ<20>	MEM_B_DQ<20> - @m39_lib.M39	15C4 29C3
MEM_B_DQ<21>	MEM_B_DQ<21> - @m39_lib.M39	15C4 29C3
MEM_B_DQ<22>	MEM_B_DQ<22> - @m39_lib.M39	15C4 29C3
MEM_B_DQ<23>	MEM_B_DQ<23> - @m39_lib.M39	5A7 15C4 29C3
MEM_B_DQ<24>	MEM_B_DQ<24> - @m39_lib.M39	15C4 29C6
MEM_B_DQ<25>	MEM_B_DQ<25> - @m39_lib.M39	5A7 15C4 29C6
MEM_B_DQ<26>	MEM_B_DQ<26> - @m39_lib.M39	15C4 29C6
MEM_B_DQ<27>	MEM_B_DQ<27> - @m39_lib.M39	15C4 29C6
MEM_B_DQ<28>	MEM_B_DQ<28> - @m39_lib.M39	15C4 29C3
MEM_B_DQ<29>	MEM_B_DQ<29> - @m39_lib.M39	15C4 29C3
MEM_B_DQ<30>	MEM_B_DQ<30> - @m39_lib.M39	15C4 29C3
MEM_B_DQ<31>	MEM_B_DQ<31> - @m39_lib.M39	15C4 29C3
MEM_B_DQ<32>	MEM_B_DQ<32> - @m39_lib.M39	15C4 29B6
MEM_B_DQ<33>	MEM_B_DQ<33> - @m39_lib.M39	15C4 29B6
MEM_B_DQ<34>	MEM_B_DQ<34> - @m39_lib.M39	15B4 29B6
MEM_B_DQ<35>	MEM_B_DQ<35> - @m39_lib.M39	15B4 29B6
MEM_B_DQ<36>	MEM_B_DQ<36> - @m39_lib.M39	15B4 29B3
MEM_B_DQ<37>	MEM_B_DQ<37> - @m39_lib.M39	15B4 29B3
MEM_B_DQ<38>	MEM_B_DQ<38> - @m39_lib.M39	5A7 15B4 29B3
MEM_B_DQ<39>	MEM_B_DQ<39> - @m39_lib.M39	15B4 29B3
MEM_B_DQ<40>	MEM_B_DQ<40> - @m39_lib.M39	15B4 29B6
MEM_B_DQ<41>	MEM_B_DQ<41> - @m39_lib.M39	15B4 29B6
MEM_B_DQ<42>	MEM_B_DQ<42> - @m39_lib.M39	15B4 29A6
MEM_B_DQ<43>	MEM_B_DQ<43> - @m39_lib.M39	15B4 29A6
MEM_B_DQ<44>	MEM_B_DQ<44> - @m39_lib.M39	5A7 15B4 29B3
MEM_B_DQ<45>	MEM_B_DQ<45> - @m39_lib.M39	15B4 29B3
MEM_B_DQ<46>	MEM_B_DQ<46> - @m39_lib.M39	15B4 29A3
MEM_B_DQ<47>	MEM_B_DQ<47> - @m39_lib.M39	15B4 29A3
MEM_B_DQ<48>	MEM_B_DQ<48> - @m39_lib.M39	5A7 15B4 29A6
MEM_B_DQ<49>	MEM_B_DQ<49> - @m39_lib.M39	15B4 29A6
MEM_B_DQ<50>	MEM_B_DQ<50> - @m39_lib.M39	15B4 29A6
MEM_B_DQ<51>	MEM_B_DQ<51> - @m39_lib.M39	15B4 29A6
MEM_B_DQ<52>	MEM_B_DQ<52> - @m39_lib.M39	15B4 29A3
MEM_B_DQ<53>	MEM_B_DQ<53> - @m39_lib.M39	15B4 29A3
MEM_B_DQ<54>	MEM_B_DQ<54> - @m39_lib.M39	15B4 29A3
MEM_B_DQ<55>	MEM_B_DQ<55> - @m39_lib.M39	15B4 29A3
MEM_B_DQ<56>	MEM_B_DQ<56> - @m39_lib.M39	15B4 29A6
MEM_B_DQ<57>	MEM_B_DQ<57> - @m39_lib.M39	15B4 29A6
MEM_B_DQ<58>	MEM_B_DQ<58> - @m39_lib.M39	15B4 29A6
MEM_B_DQ<59>	MEM_B_DQ<59> - @m39_lib.M39	15B4 29A6
MEM_B_DQ<60>	MEM_B_DQ<60> - @m39_lib.M39	15A4 29A3
MEM_B_DQ<61>	MEM_B_DQ<61> - @m39_lib.M39	15A4 29A3
MEM_B_DQ<62>	MEM_B_DQ<62> - @m39_lib.M39	5A7 15A4 29A3
MEM_B_DQ<63>	MEM_B_DQ<63> - @m39_lib.M39	15A4 29A3
MEM_B_DQS_N<0>	MEM_B_DQS_N<0> - @m39_lib.M39	5A7 15C2 29D6
MEM_B_DQS_N<1>	MEM_B_DQS_N<1> - @m39_lib.M39	5A7 15C2 29D6
MEM_B_DQS_N<2>	MEM_B_DQS_N<2> - @m39_lib.M39	5A7 15C2 29C6
MEM_B_DQS_N<3>	MEM_B_DQS_N<3> - @m39_lib.M39	5A7 15C2 29C3
MEM_B_DQS_N<4>	MEM_B_DQS_N<4> - @m39_lib.M39	5A7 15C2 29B6
MEM_B_DQS_N<5>	MEM_B_DQS_N<5> - @m39_lib.M39	5A7 15C2 29B3
MEM_B_DQS_N<6>	MEM_B_DQS_N<6> - @m39_lib.M39	5A7 15C2 29A6
MEM_B_DQS_N<7>	MEM_B_DQS_N<7> - @m39_lib.M39	5A7 15C2 29A3
MEM_B_DQS_P<0>	MEM_B_DQS_P<0> - @m39_lib.M39	5A7 15C2 29D6
MEM_B_DQS_P<1>	MEM_B_DQS_P<1> - @m39_lib.M39	5A7 15C2 29D6
MEM_B_DQS_P<2>	MEM_B_DQS_P<2> - @m39_lib.M39	5A7 15C2 29C6
MEM_B_DQS_P<3>	MEM_B_DQS_P<3> - @m39_lib.M39	5A7 15C2 29C3
MEM_B_DQS_P<4>	MEM_B_DQS_P<4> - @m39_lib.M39	5A7 15C2 29B6
MEM_B_DQS_P<5>	MEM_B_DQS_P<5> - @m39_lib.M39	5A7 15C2 29A3
MEM_B_DQS_P<6>	MEM_B_DQS_P<6> - @m39_lib.M39	5A7 15C2 29A6
MEM_B_DQS_P<7>	MEM_B_DQS_P<7> - @m39_lib.M39	5A7 15C2 29A3
MEM_B_RAS_L	MEM_B_RAS_L - @m39_lib.M39	15B2 29B3 30A6
MEM_B_SPD_SA1	MEM_B_SPD_SA1 - @m39_lib.M39	29A4
MEM_B_WE_L	MEM_B_WE_L - @m39_lib.M39	15B2 29B6 30A6
MEM_CKE<0>	MEM_CKE<0> - @m39_lib.M39	14C4 28C6
MEM_CKE<3..0>	MEM_CKE<3..0> - @m39_lib.M39	30D6
MEM_CKE<1>	MEM_CKE<1> - @m39_lib.M39	14C4 28C3
MEM_CKE<2>	MEM_CKE<2> - @m39_lib.M39	14C4 29C6
MEM_CKE<3>	MEM_CKE<3> - @m39_lib.M39	14C4 29C3
MEM_CLK_N<0>	MEM_CLK_N<0> - @m39_lib.M39	14D4 28D3
MEM_CLK_N<1>	MEM_CLK_N<1> - @m39_lib.M39	14D4 28A3
MEM_CLK_N<2>	MEM_CLK_N<2> - @m39_lib.M39	14D4 29A3
MEM_CLK_N<3>	MEM_CLK_N<3> - @m39_lib.M39	14D4 29D3
MEM_CLK_P<0>	MEM_CLK_P<0> - @m39_lib.M39	14D4 28D3
MEM_CLK_P<1>	MEM_CLK_P<1> - @m39_lib.M39	14D4 28A3
MEM_CLK_P<2>	MEM_CLK_P<2> - @m39_lib.M39	14D4 29A3
MEM_CLK_P<3>	MEM_CLK_P<3> - @m39_lib.M39	14D4 29D3
MEM_CS_L<0>	MEM_CS_L<0> - @m39_lib.M39	14C4 28B3
MEM_CS_L<3..0>	MEM_CS_L<3..0> - @m39_lib.M39	30D6
MEM_CS_L<1>	MEM_CS_L<1> - @m39_lib.M39	14C4 28B6
MEM_CS_L<2>	MEM_CS_L<2> - @m39_lib.M39	14C4 29B3
MEM_CS_L<3>	MEM_CS_L<3> - @m39_lib.M39	14C4 29B6
MEM_ODT<0>	MEM_ODT<0> - @m39_lib.M39	14C4 28B3

MEM_ODT<3..0>	MEM_ODT<3..0> - @m39_lib.M39	30D6
MEM_ODT<1>	MEM_ODT<1> - @m39_lib.M39	14C4 28B6
MEM_ODT<2>	MEM_ODT<2> - @m39_lib.M39	14C4 29B3
MEM_ODT<3>	MEM_ODT<3> - @m39_lib.M39	14C4 29B6
MEM_RCOMP	MEM_RCOMP - @m39_lib.M39	14C4
MEM_RCOMP_L	MEM_RCOMP_L - @m39_lib.M39	14C4
MEM_VREF	MEM_VREF - @m39_lib.M39	5C4 28C7 28D6 29D6
MEM_VREF_NB_0	MEM_VREF_NB_0 - @m39_lib.M39	5B7 14C4 19B6
MEM_VREF_NB_1	MEM_VREF_NB_1 - @m39_lib.M39	5B7 14C4 19B7
NB_BSEL<0>	NB_BSEL<0> - @m39_lib.M39	14C6 34B8
NB_BSEL<1>	NB_BSEL<1> - @m39_lib.M39	14C6 34B8
NB_BSEL<2>	NB_BSEL<2> - @m39_lib.M39	14C6 34A8
NB_CFG<3>	NB_CFG<3> - @m39_lib.M39	14C6
NB_CFG<4>	NB_CFG<4> - @m39_lib.M39	14C6
NB_CFG<5>	NB_CFG<5> - @m39_lib.M39	14C6 20C7
NB_CFG<6>	NB_CFG<6> - @m39_lib.M39	14C6
NB_CFG<7>	NB_CFG<7> - @m39_lib.M39	14C6 20C7
NB_CFG<8>	NB_CFG<8> - @m39_lib.M39	14C6
NB_CFG<9>	NB_CFG<9> - @m39_lib.M39	14C6 20B7
NB_CFG<10>	NB_CFG<10> - @m39_lib.M39	14C6
NB_CFG<11>	NB_CFG<11> - @m39_lib.M39	14C6
NB_CFG<12>	NB_CFG<12> - @m39_lib.M39	14C6
NB_CFG<13>	NB_CFG<13> - @m39_lib.M39	14C6
NB_CFG<14>	NB_CFG<14> - @m39_lib.M39	14C6
NB_CFG<15>	NB_CFG<15> - @m39_lib.M39	14C6
NB_CFG<16>	NB_CFG<16> - @m39_lib.M39	14C6 20C5
NB_CFG<17>	NB_CFG<17> - @m39_lib.M39	14C6
NB_CFG<18>	NB_CFG<18> - @m39_lib.M39	14C6 20B5
NB_CFG<19>	NB_CFG<19> - @m39_lib.M39	14C6 20B5
NB_CFG<20>	NB_CFG<20> - @m39_lib.M39	14B6 20A5
NB_CLK100M_GCLKIN_N	NB_CLK100M_GCLKIN_N - @m39_lib.M39	5C7 14C4 34B4 34C2
NB_CLK100M_GCLKIN_P	NB_CLK100M_GCLKIN_P - @m39_lib.M39	5C7 14C4 34B4 34C2
NB_FSB_VREF	NB_FSB_VREF - @m39_lib.M39	5D4 12C4
NB_FSB_XRCOMP	NB_FSB_XRCOMP - @m39_lib.M39	12A6
NB_FSB_XSCOMP	NB_FSB_XSCOMP - @m39_lib.M39	12A6
NB_FSB_XSWING	NB_FSB_XSWING - @m39_lib.M39	12A6
NB_FSB_YRCOMP	NB_FSB_YRCOMP - @m39_lib.M39	12A6
NB_FSB_YSCOMP	NB_FSB_YSCOMP - @m39_lib.M39	12A6
NB_FSB_YSWING	NB_FSB_YSWING - @m39_lib.M39	12A6
NB_RST_IN_L	NB_RST_IN_L - @m39_lib.M39	6B7 14B7
NB_RST_IN_L_R	NB_RST_IN_L_R - @m39_lib.M39	5C7 14B6
NB_SB_SYNC_L	NB_SB_SYNC_L - @m39_lib.M39	14B6 22A6
NB_TV_DCONSEL0	NB_TV_DCONSEL0 - @m39_lib.M39	14D6
NB_TV_DCONSEL1	NB_TV_DCONSEL1 - @m39_lib.M39	14C6
NB_VCCSM_LF1	NB_VCCSM_LF1 - @m39_lib.M39	16B4
NB_VCCSM_LF2	NB_VCCSM_LF2 - @m39_lib.M39	16B4
NB_VCCSM_LF4	NB_VCCSM_LF4 - @m39_lib.M39	16B8
NB_VCCSM_LF5	NB_VCCSM_LF5 - @m39_lib.M39	16B8
NB_VTTLF_CAP1	NB_VTTLF_CAP1 - @m39_lib.M39	17A4
NB_VTTLF_CAP2	NB_VTTLF_CAP2 - @m39_lib.M39	17A4
NB_VTTLF_CAP3	NB_VTTLF_CAP3 - @m39_lib.M39	17B4
NC_AUD_VREF_PORT_A	NC_AUD_VREF_PORT_A - @m39_lib.M39	68C1
NC_AUD_VREF_PORT_C	NC_AUD_VREF_PORT_C - @m39_lib.M39	68C1
NC_AUD_VREF_PORT_D	NC_AUD_VREF_PORT_D - @m39_lib.M39	68C1
NC_FW_NU1	NC_FW_NU1 - @m39_lib.M39	44B3
NC_FW_NU2	NC_FW_NU2 - @m39_lib.M39	44B3
NC_JE350_13	NC_JE350_13 - @m39_lib.M39	47B1
NC_SMC_P20	NC_SMC_P20 - @m39_lib.M39	59D5
	SMC_P20 - @m39_lib.M39	58D7 59D6
NC_SMC_P21	NC_SMC_P21 - @m39_lib.M39	59D5
	SMC_P21 - @m39_lib.M39	58D7 59D6
NC_SMC_P22	NC_SMC_P22 - @m39_lib.M39	59D5
	SMC_P22 - @m39_lib.M39	58D7 59D6
NC_SMC_P23	NC_SMC_P23 - @m39_lib.M39	59D5
	SMC_P23 - @m39_lib.M39	58D7 59D6
NC_SMC_P26	NC_SMC_P26 - @m39_lib.M39	59D5
	SMC_P26 - @m39_lib.M39	58D7 59D6
NC_SMC_P27	NC_SMC_P27 - @m39_lib.M39	59D5
	SMC_P27 - @m39_lib.M39	58D7 59D6
ODD_PWR_EN_L	ODD_PWR_EN_L - @m39_lib.M39	22A6 26C3
	SB_GPIO5 - @m39_lib.M39	26C2
P0V48_SMC_LSREF	P0V48_SMC_LSREF - @m39_lib.M39	59A6 59A8 59B7
PANEL_ID	PANEL_ID - @m39_lib.M39	6D6 94C2
PATA_PWR_EN_L	PATA_PWR_EN_L - @m39_lib.M39	23B3 23C3
PCIE_A_D2R_C_N	PCIE_A_D2R_C_N - @m39_lib.M39	41D5
PCIE_A_D2R_C_P	PCIE_A_D2R_C_P - @m39_lib.M39	41D5
PCIE_A_D2R_N	PCIE_A_D2R_N - @m39_lib.M39	5B8 22D4 41D4
PCIE_A_D2R_P	PCIE_A_D2R_P - @m39_lib.M39	5C8 22D4 41D4
PCIE_A_R2D_C_N	PCIE_A_R2D_C_N - @m39_lib.M39	22D4 41C3
PCIE_A_R2D_C_P	PCIE_A_R2D_C_P - @m39_lib.M39	22D4 41C3
PCIE_A_R2D_N	PCIE_A_R2D_N - @m39_lib.M39	41C5
PCIE_A_R2D_P	PCIE_A_R2D_P - @m39_lib.M39	41C5
PCIE_B_D2R_N	PCIE_B_D2R_N - @m39_lib.M39	5B8 22D4 53C7
PCIE_B_D2R_P	PCIE_B_D2R_P - @m39_lib.M39	5B8 22D4 53C7
PCIE_B_R2D_C_N	PCIE_B_R2D_C_N - @m39_lib.M39	22D4 53B7
PCIE_B_R2D_C_P	PCIE_B_R2D_C_P - @m39_lib.M39	22D4 53B7
PCIE_B_R2D_N	PCIE_B_R2D_N - @m39_lib.M39	53B6
PCIE_B_R2D_P	PCIE_B_R2D_P - @m39_lib.M39	53B6
PCIE_C_D2R_N	PCIE_C_D2R_N - @m39_lib.M39	22D4 54D8
	TP_PCIE_C_D2R_N - @m39_lib.M39	54D6
PCIE_C_D2R_P	PCIE_C_D2R_P - @m39_lib.M39	22D4 54D8
	TP_PCIE_C_D2R_P - @m39_lib.M39	54D6
PCIE_C_R2D_C_N	PCIE_C_R2D_C_N - @m39_lib.M39	22D4 54D8
	TP_PCIE_C_R2D_C_N - @m39_lib.M39	54D6
PCIE_C_R2D_C_P	PCIE_C_R2D_C_P - @m39_lib.M39	22D4 54D8
	TP_PCIE_C_R2D_C_P - @m39_lib.M39	54D6
PCIE_D_D2R_N	PCIE_D_D2R_N - @m39_lib.M39	22D4 54C8
	TP_PCIE_D_D2R_N - @m39_lib.M39	54C6
PCIE_D_D2R_P	PCIE_D_D2R_P - @m39_lib.M39	22D4 54C8
	TP_PCIE_D_D2R_P - @m39_lib.M39	54C6
PCIE_D_R2D_C_N	PCIE_D_R2D_C_N - @m39_lib.M39	22D4 54D8
	TP_PCIE_D_R2D_C_N - @m39_lib.M39	54D6
PCIE_D_R2D_C_P	PCIE_D_R2D_C_P - @m39_lib.M39	22D4 54D8
	TP_PCIE_D_R2D_C_P - @m39_lib.M39	54D6
PCIE_E_D2R_N	PCIE_E_D2R_N - @m39_lib.M39	22C4 54C8
	TP_PCIE_E_D2R_N - @m39_lib.M39	54C6
PCIE_E_D2R_P	PCIE_E_D2R_P - @m39_lib.M39	22C4 54C8
	TP_PCIE_E_D2R_P - @m39_lib.M39	54C6
PCIE_E_R2D_C_N	PCIE_E_R2D_C_N - @m39_lib.M39	22C4 54C8
	TP_PCIE_E_R2D_C_N - @m39_lib.M39	54C6
PCIE_E_R2D_C_P	PCIE_E_R2D_C_P - @m39_lib.M39	22C4 54C8
	TP_PCIE_E_R2D_C_P - @m39_lib.M39	54C6
PCIE_F_D2R_N	PCIE_F_D2R_N - @m39_lib.M39	22C4 54B8
	TP_PCIE_F_D2R_N - @m39_lib.M39	54B6
PCIE_F_D2R_P	PCIE_F_D2R_P - @m39_lib.M39	22C4 54B8
	TP_PCIE_F_D2R_P - @m39_lib.M39	54B6
PCIE_F_R2D_C_N	PCIE_F_R2D_C_N - @m39_lib.M39	22C4 54C8
	TP_PCIE_F_R2D_C_N - @m39_lib.M39	54C6
PCIE_F_R2D_C_P	PCIE_F_R2D_C_P - @m39_lib.M39	22C4 54B8
	TP_PCIE_F_R2D_C_P - @m39_lib.M39	54B6
PCIE_WAKE_L	PCIE_WAKE_L - @m39_lib.M39	23C8 41C4 53C7
PCI_AD<0>	PCI_AD<0> - @m39_lib.M39	22B7 44D5
PCI_AD<1>	PCI_AD<1> - @m39_lib.M39	22B7 44D5
PCI_AD<2>	PCI_AD<2> - @m39_lib.M39	22B7 44D5

www.teknisi-indonesia.com

PCI_AD<3>	PCI_AD<3> - @m39_lib.M39	22B7 44D5
PCI_AD<4>	PCI_AD<4> - @m39_lib.M39	22B7 44D5
PCI_AD<5>	PCI_AD<5> - @m39_lib.M39	22B7 44C5
PCI_AD<6>	PCI_AD<6> - @m39_lib.M39	22B7 44C5
PCI_AD<7>	PCI_AD<7> - @m39_lib.M39	22B7 44C5
PCI_AD<8>	PCI_AD<8> - @m39_lib.M39	22B7 44C5
PCI_AD<9>	PCI_AD<9> - @m39_lib.M39	22B7 44C5
PCI_AD<10>	PCI_AD<10> - @m39_lib.M39	22B7 44C5
PCI_AD<11>	PCI_AD<11> - @m39_lib.M39	22B7 44C5
PCI_AD<12>	PCI_AD<12> - @m39_lib.M39	22B7 44C5
PCI_AD<13>	PCI_AD<13> - @m39_lib.M39	22B7 44C5
PCI_AD<14>	PCI_AD<14> - @m39_lib.M39	22B7 44C5
PCI_AD<15>	PCI_AD<15> - @m39_lib.M39	22B7 44C5
PCI_AD<16>	PCI_AD<16> - @m39_lib.M39	22B7 44C5
PCI_AD<17>	PCI_AD<17> - @m39_lib.M39	22B7 44C5
PCI_AD<18>	PCI_AD<18> - @m39_lib.M39	22B7 44C5
PCI_AD<19>	PCI_AD<19> - @m39_lib.M39	22A7 44C6
PCI_AD<20>	PCI_AD<20> - @m39_lib.M39	22A7 44C5
PCI_AD<21>	PCI_AD<21> - @m39_lib.M39	22A7 44C5
PCI_AD<22>	PCI_AD<22> - @m39_lib.M39	22A7 44C5
PCI_AD<23>	PCI_AD<23> - @m39_lib.M39	22A7 44C5
PCI_AD<24>	PCI_AD<24> - @m39_lib.M39	22A7 44C5
PCI_AD<25>	PCI_AD<25> - @m39_lib.M39	22A7 44C5
PCI_AD<26>	PCI_AD<26> - @m39_lib.M39	22A7 44C5
PCI_AD<27>	PCI_AD<27> - @m39_lib.M39	22A7 44C5
PCI_AD<28>	PCI_AD<28> - @m39_lib.M39	22A7 44C5
PCI_AD<29>	PCI_AD<29> - @m39_lib.M39	22A7 44C5
PCI_AD<30>	PCI_AD<30> - @m39_lib.M39	22A7 44C5
PCI_AD<31>	PCI_AD<31> - @m39_lib.M39	22A7 44B5
PCI_CLK_FW	PCI_CLK_FW - @m39_lib.M39	34C4 44B5
PCI_CLK_PORT80	PCI_CLK_PORT80 - @m39_lib.M39	34B4 60C3
PCI_CLK_SB	PCI_CLK_SB - @m39_lib.M39	5C8 22A6 34B4
PCI_CLK_SMC	PCI_CLK_SMC - @m39_lib.M39	34C4 58C7
PCI_CLK_TPM	PCI_CLK_TPM - @m39_lib.M39	34C4 67C6
PCI_C_BE_L<0>	PCI_C_BE_L<0> - @m39_lib.M39	22B6 44B5
PCI_C_BE_L<1>	PCI_C_BE_L<1> - @m39_lib.M39	22B6 44B5
PCI_C_BE_L<2>	PCI_C_BE_L<2> - @m39_lib.M39	22B6 44B5
PCI_C_BE_L<3>	PCI_C_BE_L<3> - @m39_lib.M39	22B6 44B5
PCI_DEVSEL_L	PCI_DEVSEL_L - @m39_lib.M39	22A6 26D2 44B5
PCI_FRAME_L	PCI_FRAME_L - @m39_lib.M39	22A7 26D2 44B5
PCI_GNT3_L	PCI_GNT3_L - @m39_lib.M39	22B4 44B5
PCI_IDSEL	PCI_IDSEL - @m39_lib.M39	44B5
PCI_IRDY_L	PCI_IRDY_L - @m39_lib.M39	22A6 26D2 44B5
PCI_LOCK_L	PCI_LOCK_L - @m39_lib.M39	22A6 26D2
PCI_PAR	PCI_PAR - @m39_lib.M39	22A6 44B5
PCI_PERR_L	PCI_PERR_L - @m39_lib.M39	22A6 26D2 44B5
PCI_PME_FW_L	PCI_PME_FW_L - @m39_lib.M39	22B5 44B5
PCI_REQ0_L	PCI_REQ0_L - @m39_lib.M39	22B6 26D2
PCI_REQ1_L	PCI_REQ1_L - @m39_lib.M39	22B6 26D2
PCI_REQ2_L	PCI_REQ2_L - @m39_lib.M39	22B6 26D2
PCI_REQ3_L	PCI_REQ3_L - @m39_lib.M39	22B4 26D2 44B5
PCI_RST_FW_L	PCI_RST_FW_L - @m39_lib.M39	44A7 44B5
PCI_RST_L	PCI_RST_L - @m39_lib.M39	22A6 44A8
PCI_SERR_L	PCI_SERR_L - @m39_lib.M39	22A6 26D2 44B5
PCI_STOP_L	PCI_STOP_L - @m39_lib.M39	22A6 26D2 44B5
PCI_TRDY_L	PCI_TRDY_L - @m39_lib.M39	22A6 26D2 44B5
PEG_COMP	PEG_COMP - @m39_lib.M39	13D3
PEG_D2R_C_N<0>	PEG_D2R_C_N<0> - @m39_lib.M39	84D3
PEG_D2R_C_N<1>	PEG_D2R_C_N<1> - @m39_lib.M39	84D3
PEG_D2R_C_N<2>	PEG_D2R_C_N<2> - @m39_lib.M39	84D3
PEG_D2R_C_N<3>	PEG_D2R_C_N<3> - @m39_lib.M39	84D3
PEG_D2R_C_N<4>	PEG_D2R_C_N<4> - @m39_lib.M39	84C3
PEG_D2R_C_N<5>	PEG_D2R_C_N<5> - @m39_lib.M39	84C3
PEG_D2R_C_N<6>	PEG_D2R_C_N<6> - @m39_lib.M39	84C3
PEG_D2R_C_N<7>	PEG_D2R_C_N<7> - @m39_lib.M39	84C3
PEG_D2R_C_N<8>	PEG_D2R_C_N<8> - @m39_lib.M39	84C3
PEG_D2R_C_N<9>	PEG_D2R_C_N<9> - @m39_lib.M39	84C3
PEG_D2R_C_N<10>	PEG_D2R_C_N<10> - @m39_lib.M39	84B3
PEG_D2R_C_N<11>	PEG_D2R_C_N<11> - @m39_lib.M39	84B3
PEG_D2R_C_N<12>	PEG_D2R_C_N<12> - @m39_lib.M39	84B3
PEG_D2R_C_N<13>	PEG_D2R_C_N<13> - @m39_lib.M39	84B3
PEG_D2R_C_N<14>	PEG_D2R_C_N<14> - @m39_lib.M39	84B3
PEG_D2R_C_N<15>	PEG_D2R_C_N<15> - @m39_lib.M39	84B3
PEG_D2R_C_P<0>	PEG_D2R_C_P<0> - @m39_lib.M39	84D3
PEG_D2R_C_P<1>	PEG_D2R_C_P<1> - @m39_lib.M39	84D3
PEG_D2R_C_P<2>	PEG_D2R_C_P<2> - @m39_lib.M39	84D3
PEG_D2R_C_P<3>	PEG_D2R_C_P<3> - @m39_lib.M39	84D3
PEG_D2R_C_P<4>	PEG_D2R_C_P<4> - @m39_lib.M39	84D3
PEG_D2R_C_P<5>	PEG_D2R_C_P<5> - @m39_lib.M39	84C3
PEG_D2R_C_P<6>	PEG_D2R_C_P<6> - @m39_lib.M39	84C3
PEG_D2R_C_P<7>	PEG_D2R_C_P<7> - @m39_lib.M39	84C3
PEG_D2R_C_P<8>	PEG_D2R_C_P<8> - @m39_lib.M39	84C3
PEG_D2R_C_P<9>	PEG_D2R_C_P<9> - @m39_lib.M39	84C3
PEG_D2R_C_P<10>	PEG_D2R_C_P<10> - @m39_lib.M39	84B3
PEG_D2R_C_P<11>	PEG_D2R_C_P<11> - @m39_lib.M39	84B3
PEG_D2R_C_P<12>	PEG_D2R_C_P<12> - @m39_lib.M39	84B3
PEG_D2R_C_P<13>	PEG_D2R_C_P<13> - @m39_lib.M39	84B3
PEG_D2R_C_P<14>	PEG_D2R_C_P<14> - @m39_lib.M39	84B3
PEG_D2R_C_P<15>	PEG_D2R_C_P<15> - @m39_lib.M39	84B3
PEG_D2R_N<0>	PEG_D2R_N<0> - @m39_lib.M39	13D3 84B1
PEG_D2R_N<1>	PEG_D2R_N<1> - @m39_lib.M39	13D3 84B1
PEG_D2R_N<2>	PEG_D2R_N<2> - @m39_lib.M39	13D3 84B1
PEG_D2R_N<3>	PEG_D2R_N<3> - @m39_lib.M39	13D3 84B1
PEG_D2R_N<4>	PEG_D2R_N<4> - @m39_lib.M39	13D3 84B1
PEG_D2R_N<5>	PEG_D2R_N<5> - @m39_lib.M39	13D3 84B1
PEG_D2R_N<6>	PEG_D2R_N<6> - @m39_lib.M39	13D3 84C1
PEG_D2R_N<7>	PEG_D2R_N<7> - @m39_lib.M39	13D3 84C1
PEG_D2R_N<8>	PEG_D2R_N<8> - @m39_lib.M39	13D3 84C1
PEG_D2R_N<9>	PEG_D2R_N<9> - @m39_lib.M39	13D3 84C1
PEG_D2R_N<10>	PEG_D2R_N<10> - @m39_lib.M39	13C3 84C1
PEG_D2R_N<11>	PEG_D2R_N<11> - @m39_lib.M39	13C3 84C1
PEG_D2R_N<12>	PEG_D2R_N<12> - @m39_lib.M39	13C3 84D1
PEG_D2R_N<13>	PEG_D2R_N<13> - @m39_lib.M39	13C3 84D1
PEG_D2R_N<14>	PEG_D2R_N<14> - @m39_lib.M39	13C3 84D1
PEG_D2R_N<15>	PEG_D2R_N<15> - @m39_lib.M39	13C3 84D1
PEG_D2R_P<0>	PEG_D2R_P<0> - @m39_lib.M39	13C3 84B1
PEG_D2R_P<1>	PEG_D2R_P<1> - @m39_lib.M39	13C3 84B1
PEG_D2R_P<2>	PEG_D2R_P<2> - @m39_lib.M39	13C3 84B1
PEG_D2R_P<3>	PEG_D2R_P<3> - @m39_lib.M39	13C3 84B1
PEG_D2R_P<4>	PEG_D2R_P<4> - @m39_lib.M39	13C3 84B1
PEG_D2R_P<5>	PEG_D2R_P<5> - @m39_lib.M39	13C3 84B1
PEG_D2R_P<6>	PEG_D2R_P<6> - @m39_lib.M39	13C3 84C1
PEG_D2R_P<7>	PEG_D2R_P<7> - @m39_lib.M39	13C3 84C1
PEG_D2R_P<8>	PEG_D2R_P<8> - @m39_lib.M39	13C3 84C1
PEG_D2R_P<9>	PEG_D2R_P<9> - @m39_lib.M39	13C3 84C1
PEG_D2R_P<10>	PEG_D2R_P<10> - @m39_lib.M39	13C3 84C1
PEG_D2R_P<11>	PEG_D2R_P<11> - @m39_lib.M39	13C3 84D1
PEG_D2R_P<12>	PEG_D2R_P<12> - @m39_lib.M39	13C3 84D1
PEG_D2R_P<13>	PEG_D2R_P<13> - @m39_lib.M39	13C3 84D1
PEG_D2R_P<14>	PEG_D2R_P<14> - @m39_lib.M39	13C3 84D1
PEG_D2R_P<15>	PEG_D2R_P<15> - @m39_lib.M39	13C3 84D1
PEG_R2D_C_N<0>	PEG_R2D_C_N<0> - @m39_lib.M39	13C3 84B5
PEG_R2D_C_N<1>	PEG_R2D_C_N<1> - @m39_lib.M39	13C3 84B5
PEG_R2D_C_N<2>	PEG_R2D_C_N<2> - @m39_lib.M39	13C3 84B5

PEG_R2D_C_N<3>	PEG_R2D_C_N<3> - @m39_lib.M39	13B3 84B5
PEG_R2D_C_N<4>	PEG_R2D_C_N<4> - @m39_lib.M39	13B3 84B5
PEG_R2D_C_N<5>	PEG_R2D_C_N<5> - @m39_lib.M39	13B3 84B5
PEG_R2D_C_N<6>	PEG_R2D_C_N<6> - @m39_lib.M39	13B3 84C5
PEG_R2D_C_N<7>	PEG_R2D_C_N<7> - @m39_lib.M39	13B3 84C5
PEG_R2D_C_N<8>	PEG_R2D_C_N<8> - @m39_lib.M39	13B3 84C5
PEG_R2D_C_N<9>	PEG_R2D_C_N<9> - @m39_lib.M39	13B3 84C5
PEG_R2D_C_N<10>	PEG_R2D_C_N<10> - @m39_lib.M39	13B3 84C5
PEG_R2D_C_N<11>	PEG_R2D_C_N<11> - @m39_lib.M39	13B3 84C5
PEG_R2D_C_N<12>	PEG_R2D_C_N<12> - @m39_lib.M39	13B3 84D5
PEG_R2D_C_N<13>	PEG_R2D_C_N<13> - @m39_lib.M39	13B3 84D5
PEG_R2D_C_N<14>	PEG_R2D_C_N<14> - @m39_lib.M39	13B3 84D5
PEG_R2D_C_N<15>	PEG_R2D_C_N<15> - @m39_lib.M39	13B3 84D5
PEG_R2D_C_P<0>	PEG_R2D_C_P<0> - @m39_lib.M39	13B3 84B5
PEG_R2D_C_P<1>	PEG_R2D_C_P<1> - @m39_lib.M39	13B3 84B5
PEG_R2D_C_P<2>	PEG_R2D_C_P<2> - @m39_lib.M39	13B3 84B5
PEG_R2D_C_P<3>	PEG_R2D_C_P<3> - @m39_lib.M39	13B3 84B5
PEG_R2D_C_P<4>	PEG_R2D_C_P<4> - @m39_lib.M39	13B3 84B5
PEG_R2D_C_P<5>	PEG_R2D_C_P<5> - @m39_lib.M39	13B3 84B5
PEG_R2D_C_P<6>	PEG_R2D_C_P<6> - @m39_lib.M39	13B3 84C5
PEG_R2D_C_P<7>	PEG_R2D_C_P<7> - @m39_lib.M39	13B3 84C5
PEG_R2D_C_P<8>	PEG_R2D_C_P<8> - @m39_lib.M39	13B3 84C5
PEG_R2D_C_P<9>	PEG_R2D_C_P<9> - @m39_lib.M39	13B3 84C5
PEG_R2D_C_P<10>	PEG_R2D_C_P<10> - @m39_lib.M39	13B3 84C5
PEG_R2D_C_P<11>	PEG_R2D_C_P<11> - @m39_lib.M39	13B3 84D5
PEG_R2D_C_P<12>	PEG_R2D_C_P<12> - @m39_lib.M39	13A3 84D5
PEG_R2D_C_P<13>	PEG_R2D_C_P<13> - @m39_lib.M39	13A3 84D5
PEG_R2D_C_P<14>	PEG_R2D_C_P<14> - @m39_lib.M39	13A3 84D5
PEG_R2D_C_P<15>	PEG_R2D_C_P<15> - @m39_lib.M39	13A3 84D5
PEG_R2D_N<0>	PEG_R2D_N<0> - @m39_lib.M39	84D4
PEG_R2D_N<1>	PEG_R2D_N<1> - @m39_lib.M39	84D4
PEG_R2D_N<2>	PEG_R2D_N<2> - @m39_lib.M39	84D4
PEG_R2D_N<3>	PEG_R2D_N<3> - @m39_lib.M39	84D4
PEG_R2D_N<4>	PEG_R2D_N<4> - @m39_lib.M39	84C4
PEG_R2D_N<5>	PEG_R2D_N<5> - @m39_lib.M39	84C4
PEG_R2D_N<6>	PEG_R2D_N<6> - @m39_lib.M39	84C4
PEG_R2D_N<7>	PEG_R2D_N<7> - @m39_lib.M39	84C4
PEG_R2D_N<8>	PEG_R2D_N<8> - @m39_lib.M39	84C4
PEG_R2D_N<9>	PEG_R2D_N<9> - @m39_lib.M39	84C4
PEG_R2D_N<10>	PEG_R2D_N<10> - @m39_lib.M39	84B4
PEG_R2D_N<11>	PEG_R2D_N<11> - @m39_lib.M39	84B4
PEG_R2D_N<12>	PEG_R2D_N<12> - @m39_lib.M39	84B4
PEG_R2D_N<13>	PEG_R2D_N<13> - @m39_lib.M39	84B4
PEG_R2D_N<14>	PEG_R2D_N<14> - @m39_lib.M39	84B4
PEG_R2D_N<15>	PEG_R2D_N<15> - @m39_lib.M39	84B4
PEG_R2D_P<0>	PEG_R2D_P<0> - @m39_lib.M39	84D4
PEG_R2D_P<1>	PEG_R2D_P<1> - @m39_lib.M39	84D4
PEG_R2D_P<2>	PEG_R2D_P<2> - @m39_lib.M39	84D4
PEG_R2D_P<3>	PEG_R2D_P<3> - @m39_lib.M39	84D4
PEG_R2D_P<4>	PEG_R2D_P<4> - @m39_lib.M39	84D4
PEG_R2D_P<5>	PEG_R2D_P<5> - @m39_lib.M39	84C4
PEG_R2D_P<6>	PEG_R2D_P<6> - @m39_lib.M39	84C4
PEG_R2D_P<7>	PEG_R2D_P<7> - @m39_lib.M39	84C4
PEG_R2D_P<8>	PEG_R2D_P<8> - @m39_lib.M39	84C4
PEG_R2D_P<9>	PEG_R2D_P<9> - @m39_lib.M39	84C4
PEG_R2D_P<10>	PEG_R2D_P<10> - @m39_lib.M39	84B4
PEG_R2D_P<11>	PEG_R2D_P<11> - @m39_lib.M39	84B4
PEG_R2D_P<12>	PEG_R2D_P<12> - @m39_lib.M39	84B4
PEG_R2D_P<13>	PEG_R2D_P<13> - @m39_lib.M39	84B4
PEG_R2D_P<14>	PEG_R2D_P<14> - @m39_lib.M39	84B4
PEG_R2D_P<15>	PEG_R2D_P<15> - @m39_lib.M39	84B4
PEG_RESET_L	PEG_RESET_L - @m39_lib.M39	6B7 84A5
PLT_RST_L	PLT_RST_L - @m39_lib.M39	6C8 22A6
PM_BATLOW_L	PM_BATLOW_L - @m39_lib.M39	23C1 58B7
PM_BMBUSY_L	PM_BMBUSY_L - @m39_lib.M39	14B6 23C5
PM_CLKRUN_L	PM_CLKRUN_L - @m39_lib.M39	5B8 23C8 44B5 58C5 60C6 67C6
PM_DPRSLPVR	PM_DPRSLPVR - @m39_lib.M39	14B7 23C3 75C7
PM_EXTTS_L<0>	PM_EXTTS_L<0> - @m39_lib.M39	14B7 58B7 59C5
	DIMM_OVERTEMP_L - @m39_lib.M39	28C3 29C3 59C6
PM_LAN_ENABLE	PM_LAN_ENABLE - @m39_lib.M39	23C3 58D7
PM_PWRBTN_L	PM_PWRBTN_L - @m39_lib.M39	23C3 58D7
PM_PWROK	PM_PWROK - @m39_lib.M39	77B7
PM_RI_L	PM_RI_L - @m39_lib.M39	23D5
PM_RSMRST_L	PM_RSMRST_L - @m39_lib.M39	23C1 58D7
PM_SB_PWROK	PM_SB_PWROK - @m39_lib.M39	23C3 26D6
PM_SLP_S3	PM_SLP_S3 - @m39_lib.M39	77D7 78B8 80C8 81C8
PM_SLP_S3_L	PM_SLP_S3_L - @m39_lib.M39	6C8 23C3 58C5 77D8 79A7 88A6
	MEMVTT_EN - @m39_lib.M39	31B5 79A6
PM_SLP_S4	PM_SLP_S4 - @m39_lib.M39	77A7 77C7 79C8 83C6
PM_SLP_S4_L	PM_SLP_S4_L - @m39_lib.M39	23C3 58C5 77C8
PM_SLP_S5_L	PM_SLP_S5_L - @m39_lib.M39	23C3 58C5
PM_STPCPU_L	PM_STPCPU_L - @m39_lib.M39	23C8 33C4
PM_STPPCI_L	PM_STPPCI_L - @m39_lib.M39	23C8 33C4
PM_SUS_STAT_L	PM_SUS_STAT_L - @m39_lib.M39	23C5 58C5 60C3 67C6
PM_SYSRST_L	PM_SYSRST_L - @m39_lib.M39	5B8 23C5 26C3 58B7
PM_THRMTRIP_L	PM_THRMTRIP_L - @m39_lib.M39	7C6 14B6 21C2 59C7
PM_THRM_L	PM_THRM_L - @m39_lib.M39	10D3 23C8 58B7
POWER_BUTTON_L	POWER_BUTTON_L - @m39_lib.M39	5D1 59C8
PP0V9_S0_PGOOD	PP0V9_S0_PGOOD - @m39_lib.M39	77B8 79A2
PP1V2_S0_GPU_VDDPLL	PP1V2_S0_GPU_VDDPLL - @m39_lib.M39	91B6
PP1V05_S0_PGOOD	PP1V05_S0_PGOOD - @m39_lib.M39	77C8 81B2
PP1V5_S0_NB_3GPLL_F	PP1V5_S0_NB_3GPLL_F - @m39_lib.M39	19A5
PP1V5_S0_NB_VCC3G	PP1V5_S0_NB_VCC3G - @m39_lib.M39	17D6 19A3
PP1V5_S0_NB_VCCA_3GPLL	PP1V5_S0_NB_VCCA_3GPLL - @m39_lib.M39	17D6 19A3
PP1V5_S0_NB_VCCA_DPLLA	PP1V5_S0_NB_VCCA_DPLLA - @m39_lib.M39	17C6 19C4
	TP_NB_VCCA_DPLLA - @m39_lib.M39	19C5
PP1V5_S0_NB_VCCA_DPLLB	PP1V5_S0_NB_VCCA_DPLLB - @m39_lib.M39	17C6 19C4
	TP_NB_VCCA_DPLLB - @m39_lib.M39	19C5
PP1V5_S0_NB_VCCA_HPLL	PP1V5_S0_NB_VCCA_HPLL - @m39_lib.M39	17C6 19C6
PP1V5_S0_NB_VCCA_MPLL	PP1V5_S0_NB_VCCA_MPLL - @m39_lib.M39	17C6 19C6
PP1V5_S0_NB_VCCD_QTVDAC	PP1V5_S0_NB_VCCD_QTVDAC - @m39_lib.M39	17B6 19A1
	PP1V5_S0_NB_VCCD_TVDAC - @m39_lib.M39	17C6 19B1
PP1V5_S0_PGOOD	PP1V5_S0_PGOOD - @m39_lib.M39	77C8 80B2
PP1V5_S0_SB_R	PP1V5_S0_SB_R - @m39_lib.M39	25A7
PP1V5_S0_SB_VCC1_5_B	PP1V5_S0_SB_VCC1_5_B - @m39_lib.M39	22C1 24D5 25B7
PP1V5_S0_SB_VCCDMIPLL	PP1V5_S0_SB_VCCDMIPLL - @m39_lib.M39	24B5 25A6
PP1V8R2V0_S0_GPU_VDDRH0	PP1V8R2V0_S0_GPU_VDDRH0 - @m39_lib.M39	87A7
PP1V8R2V0_S0_GPU_VDDRH1	PP1V8R2V0_S0_GPU_VDDRH1 - @m39_lib.M39	87B3
PP1V8R3V3_S0_GPU_VDDR4_F	PP1V8R3V3_S0_GPU_VDDR4_F - @m39_lib.M39	91B6
PP1V8R3V3_S0_GPU_VDDR5_F	PP1V8R3V3_S0_GPU_VDDR5_F - @m39_lib.M39	91B6

PP1V8_FB_A0_VDDA0	PP1V8_FB_A0_VDDA0 - @m39_lib.M39	89D7
PP1V8_FB_A0_VDDA1	PP1V8_FB_A0_VDDA1 - @m39_lib.M39	89D7
PP1V8_FB_A1_VDDA0	PP1V8_FB_A1_VDDA0 - @m39_lib.M39	89D4
PP1V8_FB_A1_VDDA1	PP1V8_FB_A1_VDDA1 - @m39_lib.M39	89D4
PP1V8_FB_B0_VDDA0	PP1V8_FB_B0_VDDA0 - @m39_lib.M39	90D7
PP1V8_FB_B0_VDDA1	PP1V8_FB_B0_VDDA1 - @m39_lib.M39	90D7
PP1V8_FB_B1_VDDA0	PP1V8_FB_B1_VDDA0 - @m39_lib.M39	90D4
PP1V8_FB_B1_VDDA1	PP1V8_FB_B1_VDDA1 - @m39_lib.M39	90D4
PP1V8_S3_PGOOD	PP1V8_S3_PGOOD - @m39_lib.M39	79B2
PP2V5 S0_PGOOD	PP2V5 S0_PGOOD - @m39_lib.M39	77B8 77C5
PP2V5_ENET_CTAP	PP2V5_ENET_CTAP - @m39_lib.M39	43D7
PP2V5_S0_GPU_A2VDD	PP2V5_S0_GPU_A2VDD - @m39_lib.M39	93B7
PP2V5_S0_GPU_AVDD	PP2V5_S0_GPU_AVDD - @m39_lib.M39	93C7
PP2V5_S0_GPU_LPVDD	PP2V5_S0_GPU_LPVDD - @m39_lib.M39	93B7
PP2V5_S0_GPU_LVDDR	PP2V5_S0_GPU_LVDDR - @m39_lib.M39	93B7
PP2V5_S0_GPU_PVDD_F	PP2V5_S0_GPU_PVDD_F - @m39_lib.M39	91A6
PP2V5_S0_GPU_TPVDD	PP2V5_S0_GPU_TPVDD - @m39_lib.M39	93C7
PP2V5_S0_GPU_TXVDDR	PP2V5_S0_GPU_TXVDDR - @m39_lib.M39	93C7
PP2V5_S0_GPU_VDD1DI	PP2V5_S0_GPU_VDD1DI - @m39_lib.M39	93C8
PP2V5_S0_GPU_VDD2DI	PP2V5_S0_GPU_VDD2DI - @m39_lib.M39	93B8
PP3V3R12V_LCD_CONN	PP3V3R12V_LCD_CONN - @m39_lib.M39	94A6 94A6 94A7 94C5
PP3V3_AUDIO_SPDIF_EMI	PP3V3_AUDIO_SPDIF_EMI - @m39_lib.M39	73B7
PP3V3_AUDIO_SPDIF_JACK	PP3V3_AUDIO_SPDIF_JACK - @m39_lib.M39	73B5
PP3V3_AVCC_SMC	PP3V3_AVCC_SMC - @m39_lib.M39	58D3
PP3V3_AVREF_SMC	PP3V3_AVREF_SMC - @m39_lib.M39	58D2 59A3
PP3V3_FW_ESD	PP3V3_FW_ESD - @m39_lib.M39	46A5 46A6 46B5 46C5 46D5
PP3V3_FW_ESD_F	PP3V3_FW_ESD_F - @m39_lib.M39	46A7
PP3V3_INTERCON	PP3V3_INTERCON - @m39_lib.M39	72C7
PP3V3_LCD_SW	PP3V3_LCD_SW - @m39_lib.M39	94C6
PP3V3_S0_CK410_VDD48	PP3V3_S0_CK410_VDD48 - @m39_lib.M39	33D5
PP3V3_S0_CK410_VDDA	PP3V3_S0_CK410_VDDA - @m39_lib.M39	33C6
PP3V3_S0_CK410_VDD_CPU_SRC	PP3V3_S0_CK410_VDD_CPU_SRC - @m39_lib.M39	33D6
PP3V3_S0_CK410_VDD_PCI	PP3V3_S0_CK410_VDD_PCI - @m39_lib.M39	33D5
PP3V3_S0_CK410_VDD_REF	PP3V3_S0_CK410_VDD_REF - @m39_lib.M39	33C5
PP3V3_S0_IMVP6_3V3	PP3V3_S0_IMVP6_3V3 - @m39_lib.M39	75D6
PP3V3_S5_FW_VDDA	PP3V3_S5_FW_VDDA - @m39_lib.M39	44D5 45C6
PP3V3_S5_SB_RTC	PP3V3_S5_SB_RTC - @m39_lib.M39	5D2 21D6 24B3 25A3 26D7
PP3V3_SO_2V5REG_R	PP3V3_SO_2V5REG_R - @m39_lib.M39	77D5
PP3V3_TPM_3VSB	PP3V3_TPM_3VSB - @m39_lib.M39	59C5 67C4
PP4V5_AUDIO_ANALOG	PP4V5_AUDIO_ANALOG - @m39_lib.M39	68A2 68D2 74D8
PP5V_BNDI_LE340	PP5V_BNDI_LE340 - @m39_lib.M39	47D3
PP5V_S0_DDC	PP5V_S0_DDC - @m39_lib.M39	97D4
PP5V_S0_DDC_FUSE	PP5V_S0_DDC_FUSE - @m39_lib.M39	97D5
PP5V_S0_GPUVCORE_VCC	PP5V_S0_GPUVCORE_VCC - @m39_lib.M39	85D7 88D8
PP5V_S0_IMVP6_VDD	PP5V_S0_IMVP6_VDD - @m39_lib.M39	75D6
PP5V_S0_SB_V5REF	PP5V_S0_SB_V5REF - @m39_lib.M39	24D5 25D7
PP5V_S3_BNDI	PP5V_S3_BNDI - @m39_lib.M39	47B2 47D1
PP5V_S5_SB_V5REF_SUS	PP5V_S5_SB_V5REF_SUS - @m39_lib.M39	24D5 25C7
PP5V_USB2	PP5V_USB2 - @m39_lib.M39	47D7
PP5V_USB2_PORT0_F	PP5V_USB2_PORT0_F - @m39_lib.M39	47D5
PP5V_USB2_PORT1_F	PP5V_USB2_PORT1_F - @m39_lib.M39	47C5
PP5V_USB2_PORT2_F	PP5V_USB2_PORT2_F - @m39_lib.M39	47B5
PP12V_AUD_SPKRAMP_PLANE	PP12V_AUD_SPKRAMP_PLANE - @m39_lib.M39	72D5
PP12V_L7502	PP12V_L7502 - @m39_lib.M39	76D7
PP12V_S5_CPU_REG	PP12V_S5_CPU_REG - @m39_lib.M39	75C3 75D4 75D7 76C8 76D6
PPFW_PORT0_VP	PPFW_PORT0_VP - @m39_lib.M39	46D2
PPFW_PORT0_VP_FL	PPFW_PORT0_VP_FL - @m39_lib.M39	46C2
PPFW_PORT1_VP	PPFW_PORT1_VP - @m39_lib.M39	46B2 46D1
PPFW_PORT1_VP_FL	PPFW_PORT1_VP_FL - @m39_lib.M39	46B2
PPFW_PORTS_VP	PPFW_PORTS_VP - @m39_lib.M39	46D3
PPVCORE_S0_GPU_MPVDD	PPVCORE_S0_GPU_MPVDD - @m39_lib.M39	91A6
PPVCORE_S0_GPU_VDDCI	PPVCORE_S0_GPU_VDDCI - @m39_lib.M39	86C7
PPVIN_S5_IMVP6_VIN	PPVIN_S5_IMVP6_VIN - @m39_lib.M39	75D6
PPV_3V3_AUDIO_CODEC	PPV_3V3_AUDIO_CODEC - @m39_lib.M39	68D6
Q4201_3	Q4201_3 - @m39_lib.M39	42D6
R7504_1	R7504_1 - @m39_lib.M39	75A8 75C1
R7507_1	R7507_1 - @m39_lib.M39	75A6 75B1
R8599_2	R8599_2 - @m39_lib.M39	85C4
RSMRST_PWRGD	RSMRST_PWRGD - @m39_lib.M39	58D7 76D1
SATA_A_D2R_N	SATA_A_D2R_N - @m39_lib.M39	21B6 38A6
	TP_SATA_A_D2R_N - @m39_lib.M39	38A5
SATA_A_D2R_P	SATA_A_D2R_P - @m39_lib.M39	21B6 38A6
	TP_SATA_A_D2R_P - @m39_lib.M39	38A5
SATA_A_R2D_C_N	SATA_A_R2D_C_N - @m39_lib.M39	21B6 38A6
	TP_SATA_A_R2D_N - @m39_lib.M39	38A5
SATA_A_R2D_C_P	SATA_A_R2D_C_P - @m39_lib.M39	21B6 38A6
	TP_SATA_A_R2D_P - @m39_lib.M39	38A5
SATA_C_D2R_C_N	SATA_C_D2R_C_N - @m39_lib.M39	38B8
SATA_C_D2R_C_P	SATA_C_D2R_C_P - @m39_lib.M39	38B8
SATA_C_D2R_N	SATA_C_D2R_N - @m39_lib.M39	21B6 38B6
SATA_C_D2R_P	SATA_C_D2R_P - @m39_lib.M39	21B6 38B6
SATA_C_DET_L	SATA_C_DET_L - @m39_lib.M39	23D2 38B5
SATA_C_PWR_EN_L	SATA_C_PWR_EN_L - @m39_lib.M39	23A3 23B3
SATA_C_R2D_C_N	SATA_C_R2D_C_N - @m39_lib.M39	21B6 38B6
SATA_C_R2D_C_P	SATA_C_R2D_C_P - @m39_lib.M39	21B6 38B6
SATA_C_R2D_N	SATA_C_R2D_N - @m39_lib.M39	38B8
SATA_C_R2D_P	SATA_C_R2D_P - @m39_lib.M39	38B8
SATA_RBIAS_N	SATA_RBIAS_N - @m39_lib.M39	21B6 38C7
	SATA_RBIAS_P - @m39_lib.M39	21B6 38C7
	SATA_RBIAS - @m39_lib.M39	38C7
	SATA_RBIAS_P - @m39_lib.M39	21B6 38C7
	SATA_RBIAS - @m39_lib.M39	38C7
SB_A20GATE	SB_A20GATE - @m39_lib.M39	21C4
SB_ACZ_BITCLK	SB_ACZ_BITCLK - @m39_lib.M39	21C6
SB_ACZ_RST_L	SB_ACZ_RST_L - @m39_lib.M39	21C6
SB_ACZ_SDATAOUT	SB_ACZ_SDATAOUT - @m39_lib.M39	21C6
SB_ACZ_SYNC	SB_ACZ_SYNC - @m39_lib.M39	21C6
SB_CLK14P3M_TIMER	SB_CLK14P3M_TIMER - @m39_lib.M39	5B8 23D3 34D4
SB_CLK48M_USBCTLR	SB_CLK48M_USBCTLR - @m39_lib.M39	5B8 23D3 34C4
SB_CLK100M_DMI_N	SB_CLK100M_DMI_N - @m39_lib.M39	5B8 22C2 34A4 34C2
SB_CLK100M_DMI_P	SB_CLK100M_DMI_P - @m39_lib.M39	5B8 22C2 34A4 34C2
SB_CLK100M_SATA_N	SB_CLK100M_SATA_N - @m39_lib.M39	5C8 21B6 34B4 34C2
SB_CLK100M_SATA_OE_L	SB_CLK100M_SATA_OE_L - @m39_lib.M39	23C3 33B4
SB_CLK100M_SATA_P	SB_CLK100M_SATA_P - @m39_lib.M39	5C8 21B6 34B4 34C2
SB_CRT_TVOUT_MUX	SB_CRT_TVOUT_MUX - @m39_lib.M39	22B5
SB_GPIO2	SB_GPIO2 - @m39_lib.M39	22A6 26C2
SB_GPIO3	SB_GPIO3 - @m39_lib.M39	22A6 26C2
SB_GPIO4	SB_GPIO4 - @m39_lib.M39	22A6 26C2
SB_GPIO19	SB_GPIO19 - @m39_lib.M39	23D3
SB_GPIO21	SB_GPIO21 - @m39_lib.M39	23D3
SB_GPIO26	SB_GPIO26 - @m39_lib.M39	23C7
SB_GPIO29	SB_GPIO29 - @m39_lib.M39	22C4 22D8
SB_GPIO30	SB_GPIO30 - @m39_lib.M39	22C4 22D8
SB_GPIO31	SB_GPIO31 - @m39_lib.M39	22C4 22D8
SB_GPIO37	SB_GPIO37 - @m39_lib.M39	23D3
SB_INTVRMEN	SB_INTVRMEN - @m39_lib.M39	21D6
SB_RTC_RST_L	SB_RTC_RST_L - @m39_lib.M39	21D6 26C7
SB_RTC_X1	SB_RTC_X1 - @m39_lib.M39	21D6 26D7

SB_RTC_X2	SB_RTC_X2 - @m39_lib.M39	21D6 26D7
SB_SM_INTRUDER_L	SB_SM_INTRUDER_L - @m39_lib.M39	21D6 26C7
SB_SPKR	SB_SPKR - @m39_lib.M39	23C5
SC_RX_L	SC_RX_L - @m39_lib.M39	58C5 59B6 59C4
SC_TX_L	SC_TX_L - @m39_lib.M39	58C5 59B4 59B6
SDVO_CTRLCLK	SDVO_CTRLCLK - @m39_lib.M39	14B6 19A2
	TP_SDVO_CTRLCLK - @m39_lib.M39	19A1
SDVO_CTRLDATA	SDVO_CTRLDATA - @m39_lib.M39	14B6 19A2
	TP_SDVO_CTRLDATA - @m39_lib.M39	19A1
SMB_ALERT_L	SMB_ALERT_L - @m39_lib.M39	23C5
SMB_BSA_CLK	SMB_BSA_CLK - @m39_lib.M39	58B5 59C1
SMB_BSA_DATA	SMB_BSA_DATA - @m39_lib.M39	58B5 59C1
SMB_BSB_CLK	SMB_BSB_CLK - @m39_lib.M39	58C5 59D1
SMB_BSB_DATA	SMB_BSB_DATA - @m39_lib.M39	58C7 59D1
SMB_LINK_ALERT_L	SMB_LINK_ALERT_L - @m39_lib.M39	23D5
SMC_ADAPTER_EN	SMC_ADAPTER_EN - @m39_lib.M39	58D5 59D5
	TP_SMC_ADAPTER_EN - @m39_lib.M39	59D3
SMC_ANALOG_ID	SMC_ANALOG_ID - @m39_lib.M39	58A7 59C6
	NC_SMC_ANALOG_ID - @m39_lib.M39	59C5
SMC_BATT_CHG_EN	SMC_BATT_CHG_EN - @m39_lib.M39	58D7 59D6
	NC_SMC_BATT_CHG_EN - @m39_lib.M39	59D5
SMC_BATT_ISENSE	SMC_BATT_ISENSE - @m39_lib.M39	58D5 59B6
	UNUSED_SMC_SENSE - @m39_lib.M39	59B5 59B5 59B6
	SMC_FWIRE_ISENSE - @m39_lib.M39	58D5 59B6
	UNUSED_SMC_SENSE - @m39_lib.M39	59B5 59B5 59B6
	SMC_FWIRE_ISENSE - @m39_lib.M39	58D5 59B6
SMC_BATT_ISET	SMC_BATT_ISET - @m39_lib.M39	58B5 59D6
	NC_SMC_BATT_ISET - @m39_lib.M39	59D5
SMC_BATT_TRICKLE_EN_L	SMC_BATT_TRICKLE_EN_L - @m39_lib.M39	58D7 59D6
	NC_SMC_BATT_TRICKLE_EN_L - @m39_lib.M39	59D5
SMC_BATT_VSET	SMC_BATT_VSET - @m39_lib.M39	58B5 59D6
	NC_SMC_BATT_VSET - @m39_lib.M39	59D5
SMC_BC_ACOK	SMC_BC_ACOK - @m39_lib.M39	58C5 59B4
SMC_BS_ALRT_L	SMC_BS_ALRT_L - @m39_lib.M39	58C5 59B4
SMC_CASE_OPEN	SMC_CASE_OPEN - @m39_lib.M39	58C5 59C1
SMC_CPU_ISENSE	SMC_CPU_ISENSE - @m39_lib.M39	58D5 76D2
SMC_CPU_RESET_3_3_L	SMC_CPU_RESET_3_3_L - @m39_lib.M39	58B5 59A7
SMC_CPU_VSENSE	SMC_CPU_VSENSE - @m39_lib.M39	58D5 76B2
SMC_DCIN_ISENSE	SMC_DCIN_ISENSE - @m39_lib.M39	58D5 76D5
SMC_EXCARD_CP	SMC_EXCARD_CP - @m39_lib.M39	58B7 59C4
SMC_EXCARD_PWR_EN	SMC_EXCARD_PWR_EN - @m39_lib.M39	58B7 59C5
	TP_SMC_EXCARD_PWR_EN - @m39_lib.M39	59C3
SMC_EXCARD_PWR_OC_L	SMC_EXCARD_PWR_OC_L - @m39_lib.M39	58B7 59C4
SMC_EXTAL	SMC_EXTAL - @m39_lib.M39	58C3 59B8
SMC_EXTSMI_L	SMC_EXTSMI_L - @m39_lib.M39	23B8 58B7
SMC_FAN_0_CTL	SMC_FAN_0_CTL - @m39_lib.M39	58B7 65D8
	FAN_RPM0 - @m39_lib.M39	65D7
SMC_FAN_0_TACH	SMC_FAN_0_TACH - @m39_lib.M39	58B7 65C8
SMC_FAN_1_CTL	SMC_FAN_1_CTL - @m39_lib.M39	58B7 65B8 66D8
SMC_FAN_1_TACH	SMC_FAN_1_TACH - @m39_lib.M39	58B7 65A8 66C8
SMC_FAN_2_CTL	SMC_FAN_2_CTL - @m39_lib.M39	58B7 65B8 66D8
SMC_FAN_2_TACH	SMC_FAN_2_TACH - @m39_lib.M39	58B7 65A8 66C8
SMC_FAN_3_CTL	SMC_FAN_3_CTL - @m39_lib.M39	58B7 59C5
	TP_SMC_FAN_3_CTL - @m39_lib.M39	59C3
SMC_FAN_3_TACH	SMC_FAN_3_TACH - @m39_lib.M39	58B7 59C5
	TP_SMC_FAN_3_TACH - @m39_lib.M39	59C3
SMC_FWE	SMC_FWE - @m39_lib.M39	58B5 59B4
SMC_GPU_VSENSE	SMC_GPU_VSENSE - @m39_lib.M39	58D5 59B3
SMC_LID	SMC_LID - @m39_lib.M39	58B5 59C1
SMC_LRESET_L	SMC_LRESET_L - @m39_lib.M39	6B7 58C7
SMC_MANUAL_RST_L	SMC_MANUAL_RST_L - @m39_lib.M39	5D1 59D8
SMC_MD1	SMC_MD1 - @m39_lib.M39	58C1 60B5
SMC_MEM_ISENSE	SMC_MEM_ISENSE - @m39_lib.M39	58A7 59B6
	NC_SMC_MEM_ISENSE - @m39_lib.M39	59B5
SMC_NB_ISENSE	SMC_NB_ISENSE - @m39_lib.M39	58A7 59B6
	NC_SMC_NB_ISENSE - @m39_lib.M39	59B5
SMC_NMI	SMC_NMI - @m39_lib.M39	58C1 60B4
SMC_ODD_DETECT	SMC_ODD_DETECT - @m39_lib.M39	58B7 59C4
SMC_ONOFF_L	SMC_ONOFF_L - @m39_lib.M39	58C5 59B7 59C4
SMC_PB7	SMC_PB7 - @m39_lib.M39	59C5 59C5
	TP_SMC_PB7 - @m39_lib.M39	59C3 59C3
SMC_PBUS_VSENSE	SMC_PBUS_VSENSE - @m39_lib.M39	58D5 76C6
SMC_PBUS_VSENSE_R	SMC_PBUS_VSENSE_R - @m39_lib.M39	76C8
SMC_PF0	SMC_PF0 - @m39_lib.M39	58B5 59D5
	TP_SMC_PF0 - @m39_lib.M39	59D3
SMC_PF1	SMC_PF1 - @m39_lib.M39	58B5 59D5
	TP_SMC_PF1 - @m39_lib.M39	59D3
SMC_PM_G2_EN	SMC_PM_G2_EN - @m39_lib.M39	58D5 59D5
	TP_PM_G2_EN - @m39_lib.M39	59D3
SMC_PROCHOT	SMC_PROCHOT - @m39_lib.M39	58B5 59C7
SMC_PROCHOT_3_3_L	SMC_PROCHOT_3_3_L - @m39_lib.M39	58D5 59A7
SMC_RCIN_L	SMC_RCIN_L - @m39_lib.M39	21C3 58C7
SMC_REF_GATE1	SMC_REF_GATE1 - @m39_lib.M39	59A5
SMC_REF_GATE2	SMC_REF_GATE2 - @m39_lib.M39	59A4
SMC_REF_IN	SMC_REF_IN - @m39_lib.M39	59A4
SMC_RSTGATE_L	SMC_RSTGATE_L - @m39_lib.M39	42C3 44A8 58D7
SMC_RST_L	SMC_RST_L - @m39_lib.M39	58C3 59D7 60B4
SMC_RUNTIME_SCI_L	SMC_RUNTIME_SCI_L - @m39_lib.M39	23C8 58B7
SMC_RX_L	SMC_RX_L - @m39_lib.M39	5D1 58C7 59B4 59B5 60B4
SMC_SB_NMI	SMC_SB_NMI - @m39_lib.M39	23C3 58D7
SMC_SMB_0_CLK	SMC_SMB_0_CLK - @m39_lib.M39	58C7 59D1
	TP_SMC_SMB_0_CLK - @m39_lib.M39	59D1
SMC_SMB_0_DATA	SMC_SMB_0_DATA - @m39_lib.M39	58C5 59D1
	TP_SMC_SMB_0_DATA - @m39_lib.M39	59D1
SMC_SYS_ISET	SMC_SYS_ISET - @m39_lib.M39	58B5 59D6
	NC_SMC_SYS_ISET - @m39_lib.M39	59D5
SMC_SYS_KBDLED	SMC_SYS_KBDLED - @m39_lib.M39	58C7 59D5
	TP_SMC_SYS_KBDLED - @m39_lib.M39	59D3
SMC_SYS_LED	SMC_SYS_LED - @m39_lib.M39	58C7 59D7
SMC_SYS_VSET	SMC_SYS_VSET - @m39_lib.M39	58B5 59D6
	NC_SMC_SYS_VSET - @m39_lib.M39	59D5
SMC_TCK	SMC_TCK - @m39_lib.M39	5D1 58C5 59B4 60B4
SMC_TDI	SMC_TDI - @m39_lib.M39	5D1 58B5 59B4 60B4
SMC_TDO	SMC_TDO - @m39_lib.M39	5D1 58B5 59B4 60B5
SMC_THRMTRIP	SMC_THRMTRIP - @m39_lib.M39	58B5 59C7
SMC_TMS	SMC_TMS - @m39_lib.M39	5D1 58B5 59B4 60B5
SMC_TPM_GPIO	SMC_TPM_GPIO - @m39_lib.M39	58D5 59B6
SMC_TPM_PP	SMC_TPM_PP - @m39_lib.M39	58C7 59A6
SMC_TPM_RESET_L	SMC_TPM_RESET_L - @m39_lib.M39	58B7 59C6 67B7
SMC_TRST_L	SMC_TRST_L - @m39_lib.M39	5D1 58C1 60B5
SMC_TX_L	SMC_TX_L - @m39_lib.M39	5D1 58C7 59B4 59B5 60B5
SMC_VCL	SMC_VCL - @m39_lib.M39	58D3
SMC_WAKE_SCI_L	SMC_WAKE_SCI_L - @m39_lib.M39	23C1 58D5
SMC_XDP_TCK	SMC_XDP_TCK - @m39_lib.M39	58C7 59A2
SMC_XDP_TCK_3_3	SMC_XDP_TCK_3_3 - @m39_lib.M39	58B5 59A5
SMC_XDP_TCK_R	SMC_XDP_TCK_R - @m39_lib.M39	59A1
SMC_XDP_TDI_L	SMC_XDP_TDI_L - @m39_lib.M39	58C7 59B3
SMC_XDP_TDO_3_3_L	SMC_XDP_TDO_3_3_L - @m39_lib.M39	58B7 59A5
SMC_XDP_TMS_L	SMC_XDP_TMS_L - @m39_lib.M39	58C7 59B2
SMC_XDP_TRST_L	SMC_XDP_TRST_L - @m39_lib.M39	58C7 59A3
SMC_XDP_TRST_L_R	SMC_XDP_TRST_L_R - @m39_lib.M39	59A3
SMC_XTAL	SMC_XTAL - @m39_lib.M39	58C3 59B8

www.teknisi-indonesia.com

SMLINK<0>	SMLINK<0> - @m39_lib.M39	23D5
SMLINK<1>	SMLINK<1> - @m39_lib.M39	23D5
SMS_INT_L	SMS_INT_L - @m39_lib.M39	23C3 26C2 58B5
SMS_ONOFF_L	SMS_ONOFF_L - @m39_lib.M39	58A5 59B4
SMS_X_AXIS	SMS_X_AXIS - @m39_lib.M39	58B7 59B6
	NC_SMS_X_AXIS - @m39_lib.M39	59B5
SMS_Y_AXIS	SMS_Y_AXIS - @m39_lib.M39	58B7 59B6
	NC_SMS_Y_AXIS - @m39_lib.M39	59B5
SMS_Z_AXIS	SMS_Z_AXIS - @m39_lib.M39	58A7 59B6
	NC_SMS_Z_AXIS - @m39_lib.M39	59B5
SPARE_SRC3_N	SPARE_SRC3_N - @m39_lib.M39	34D2
SPARE_SRC3_P	SPARE_SRC3_P - @m39_lib.M39	34D2
SPARE_SRC7_N	SPARE_SRC7_N - @m39_lib.M39	34D2
SPARE_SRC7_P	SPARE_SRC7_P - @m39_lib.M39	34D2
SPI_ARB	SPI_ARB - @m39_lib.M39	22C6 58D5
SPI_CE_L	SPI_CE_L - @m39_lib.M39	22C6 58B5 63C7
SPI_HOLD_L	SPI_HOLD_L - @m39_lib.M39	63C4
SPI_SCLK	SPI_SCLK - @m39_lib.M39	22C6 58D5 63C7
SPI_SCLK_R	SPI_SCLK_R - @m39_lib.M39	63C4
SPI_SI	SPI_SI - @m39_lib.M39	22C6 58D5 63C1
SPI_SI_R	SPI_SI_R - @m39_lib.M39	63C3
SPI_SO	SPI_SO - @m39_lib.M39	22C6 58D5 63C1
SPI_SO_R	SPI_SO_R - @m39_lib.M39	63C3
SPI_WP_L	SPI_WP_L - @m39_lib.M39	63C4
SPKRAMP_MUTE	SPKRAMP_MUTE - @m39_lib.M39	72B5
SPKRAMP_SS	SPKRAMP_SS - @m39_lib.M39	72B4
SUS_CLK_SB	SUS_CLK_SB - @m39_lib.M39	23C3 59B5
	SMC_SUS_CLK - @m39_lib.M39	58C5 59B6
SV_SET_UP	SV_SET_UP - @m39_lib.M39	23B6 23C3 60B3
SW_RST_BTN_L	SW_RST_BTN_L - @m39_lib.M39	5D1 26C6
SW_RST_DEBNC	SW_RST_DEBNC - @m39_lib.M39	26C4
SYS_LED_DRV_C	SYS_LED_DRV_C - @m39_lib.M39	59D6
SYS_LED_DRV_K	SYS_LED_DRV_K - @m39_lib.M39	59D6
SYS_ONEWIRE	SYS_ONEWIRE - @m39_lib.M39	58B7 59B4
SYS_POWERFAIL_L	SYS_POWERFAIL_L - @m39_lib.M39	6D8 76D2
SYS_PWRUP_L	SYS_PWRUP_L - @m39_lib.M39	6C7
THERM_DX_N	THERM_DX_N - @m39_lib.M39	10B5 10C5
THERM_DX_P	THERM_DX_P - @m39_lib.M39	10B5 10C5
THRM_ALERT_L	THRM_ALERT_L - @m39_lib.M39	10D3
THRM_THM	THRM_THM - @m39_lib.M39	10C4
TMDS_CK_TERM	TMDS_CK_TERM - @m39_lib.M39	97C8
TMDS_CLK_N	TMDS_CLK_N - @m39_lib.M39	93C3 97C8
TMDS_CLK_P	TMDS_CLK_P - @m39_lib.M39	93C3 97C8
TMDS_CONN_CLKN	TMDS_CONN_CLKN - @m39_lib.M39	97C4 97C7
TMDS_CONN_CLKP	TMDS_CONN_CLKP - @m39_lib.M39	97C4 97C7
TMDS_CONN_DN<0>	TMDS_CONN_DN<0> - @m39_lib.M39	97C4 97D7
TMDS_CONN_DN<1>	TMDS_CONN_DN<1> - @m39_lib.M39	97C4 97D7
TMDS_CONN_DN<2>	TMDS_CONN_DN<2> - @m39_lib.M39	97C7 97D4
TMDS_CONN_DP<0>	TMDS_CONN_DP<0> - @m39_lib.M39	97C4 97D7
TMDS_CONN_DP<1>	TMDS_CONN_DP<1> - @m39_lib.M39	97C4 97D7
TMDS_CONN_DP<2>	TMDS_CONN_DP<2> - @m39_lib.M39	97C7 97D4
TMDS_DATA_N<0>	TMDS_DATA_N<0> - @m39_lib.M39	93C3 97D8
TMDS_DATA_N<1>	TMDS_DATA_N<1> - @m39_lib.M39	93C3 97D8
TMDS_DATA_N<2>	TMDS_DATA_N<2> - @m39_lib.M39	93C3 97C8
TMDS_DATA_N<3>	TMDS_DATA_N<3> - @m39_lib.M39	93C3 95D6
TMDS_DATA_N<4>	TMDS_DATA_N<4> - @m39_lib.M39	93C3 95D6
TMDS_DATA_N<5>	TMDS_DATA_N<5> - @m39_lib.M39	93C3 95D6
TMDS_DATA_P<0>	TMDS_DATA_P<0> - @m39_lib.M39	93C3 97D8
TMDS_DATA_P<1>	TMDS_DATA_P<1> - @m39_lib.M39	93C3 97C8
TMDS_DATA_P<2>	TMDS_DATA_P<2> - @m39_lib.M39	93C3 97C8
TMDS_DATA_P<3>	TMDS_DATA_P<3> - @m39_lib.M39	93C3 95D6
TMDS_DATA_P<4>	TMDS_DATA_P<4> - @m39_lib.M39	93C3 95D6
TMDS_DATA_P<5>	TMDS_DATA_P<5> - @m39_lib.M39	93C3 95D6
TPM_BADD	TPM_BADD - @m39_lib.M39	67C4
TPM_GPIO1	TPM_GPIO1 - @m39_lib.M39	59B5 67C6
TPM_GPIO2	TPM_GPIO2 - @m39_lib.M39	59B5 67C6
TPM_LRESET_L	TPM_LRESET_L - @m39_lib.M39	6B7 67B7
TPM_PP	TPM_PP - @m39_lib.M39	59A5 67C6
TPM_RST_L	TPM_RST_L - @m39_lib.M39	67B6
TPM_XTALI	TPM_XTALI - @m39_lib.M39	59B7 67C6
TPM_XTALO	TPM_XTALO - @m39_lib.M39	59B7 67C6
TP_ATI_ROMCS_L	TP_ATI_ROMCS_L - @m39_lib.M39	91A3
TP_AZ_DOCK_EN_L	TP_AZ_DOCK_EN_L - @m39_lib.M39	23C5
TP_AZ_DOCK_RST_L	TP_AZ_DOCK_RST_L - @m39_lib.M39	23C5
TP_CLK14P3M_SPARE	TP_CLK14P3M_SPARE - @m39_lib.M39	34C4
TP_CPU_A32_L	TP_CPU_A32_L - @m39_lib.M39	7C7
TP_CPU_A33_L	TP_CPU_A33_L - @m39_lib.M39	7B7
TP_CPU_A34_L	TP_CPU_A34_L - @m39_lib.M39	7B7
TP_CPU_A35_L	TP_CPU_A35_L - @m39_lib.M39	7B7
TP_CPU_A36_L	TP_CPU_A36_L - @m39_lib.M39	7B7
TP_CPU_A37_L	TP_CPU_A37_L - @m39_lib.M39	7B7
TP_CPU_A38_L	TP_CPU_A38_L - @m39_lib.M39	7B7
TP_CPU_A39_L	TP_CPU_A39_L - @m39_lib.M39	7B7
TP_CPU_APM0_L	TP_CPU_APM0_L - @m39_lib.M39	7B7
TP_CPU_APM1_L	TP_CPU_APM1_L - @m39_lib.M39	7B7
TP_CPU_CPUSLP_L	TP_CPU_CPUSLP_L - @m39_lib.M39	21C4
TP_CPU_EXTBREF	TP_CPU_EXTBREF - @m39_lib.M39	7B6
TP_CPU_HFPLL	TP_CPU_HFPLL - @m39_lib.M39	7B7
TP_CPU_SPARE0	TP_CPU_SPARE0 - @m39_lib.M39	7B6
TP_CPU_SPARE1	TP_CPU_SPARE1 - @m39_lib.M39	7B6
TP_CPU_SPARE2	TP_CPU_SPARE2 - @m39_lib.M39	7B6
TP_CPU_SPARE3	TP_CPU_SPARE3 - @m39_lib.M39	7B6
TP_CPU_SPARE4	TP_CPU_SPARE4 - @m39_lib.M39	7B6
TP_CPU_SPARE5	TP_CPU_SPARE5 - @m39_lib.M39	7B6
TP_CPU_SPARE6	TP_CPU_SPARE6 - @m39_lib.M39	7B6
TP_CPU_SPARE7	TP_CPU_SPARE7 - @m39_lib.M39	7B6
TP_FB_A_MA12	TP_FB_A_MA12 - @m39_lib.M39	87D5
TP_FB_A_ODT<0>	TP_FB_A_ODT<0> - @m39_lib.M39	87B5
TP_FB_A_ODT<1>	TP_FB_A_ODT<1> - @m39_lib.M39	87B5
TP_FB_B_MA12	TP_FB_B_MA12 - @m39_lib.M39	87D1
TP_FB_B_ODT<0>	TP_FB_B_ODT<0> - @m39_lib.M39	87B1
TP_FB_B_ODT<1>	TP_FB_B_ODT<1> - @m39_lib.M39	87B1
TP_FW_CNA	TP_FW_CNA - @m39_lib.M39	44B3
TP_FW_LKON	TP_FW_LKON - @m39_lib.M39	44B3
TP_FW_LPS	TP_FW_LPS - @m39_lib.M39	44B3
TP_FW_MPCIACT_L	TP_FW_MPCIACT_L - @m39_lib.M39	44B3
TP_FW_NANDTREE	TP_FW_NANDTREE - @m39_lib.M39	44B3
TP_FW_ROM_AD	TP_FW_ROM_AD - @m39_lib.M39	44B3
TP_FW_VAUX_PRES	TP_FW_VAUX_PRES - @m39_lib.M39	44B3
TP_LVDS_VBG	TP_LVDS_VBG - @m39_lib.M39	13D5
TP_MEM_A_A<14>	TP_MEM_A_A<14> - @m39_lib.M39	28C3
TP_MEM_A_A<15>	TP_MEM_A_A<15> - @m39_lib.M39	28C3
TP_MEM_B_A<14>	TP_MEM_B_A<14> - @m39_lib.M39	5B4 29C3
TP_MEM_B_A<15>	TP_MEM_B_A<15> - @m39_lib.M39	5B4 29C3
TP_NB_TESTIN_L	TP_NB_TESTIN_L - @m39_lib.M39	14D6
TP_NB_XOR_FSB2_H7	TP_NB_XOR_FSB2_H7 - @m39_lib.M39	14D6
TP_NB_XOR_LVDS_A34	TP_NB_XOR_LVDS_A34 - @m39_lib.M39	14C6
TP_NB_XOR_LVDS_A35	TP_NB_XOR_LVDS_A35 - @m39_lib.M39	14C6
TP_NB_XOR_LVDS_D27	TP_NB_XOR_LVDS_D27 - @m39_lib.M39	14C6
TP_NB_XOR_LVDS_D28	TP_NB_XOR_LVDS_D28 - @m39_lib.M39	14C6
TP_PCI_CLK_SPARE	TP_PCI_CLK_SPARE - @m39_lib.M39	5B4 34C4
TP_PCI_GNT0_L	TP_PCI_GNT0_L - @m39_lib.M39	22B6
TP_PCI_GNT1_L	TP_PCI_GNT1_L - @m39_lib.M39	22B6
TP_PCI_GNT2_L	TP_PCI_GNT2_L - @m39_lib.M39	22B6

TP_PCI_GNT4_L	TP_PCI_GNT4_L - @m39_lib.M39	22B6
TP_PCI_PME_L	TP_PCI_PME_L - @m39_lib.M39	22A6
TP_SB_ACZ_SDIN1	TP_SB_ACZ_SDIN1 - @m39_lib.M39	21C6
TP_SB_ACZ_SDIN2	TP_SB_ACZ_SDIN2 - @m39_lib.M39	21C6
TP_SB_DRQ0_L	TP_SB_DRQ0_L - @m39_lib.M39	21D4
TP_SB_GPIO6	TP_SB_GPIO6 - @m39_lib.M39	23C5
TP_SB_GPIO23	TP_SB_GPIO23 - @m39_lib.M39	21D5
TP_SB_GPIO25_DO_NOT_	TP_SB_GPIO25_DO_NOT_USE -	23C3
USE	@m39_lib.M39	
TP_SB_GPIO38	TP_SB_GPIO38 - @m39_lib.M39	23C3
TP_SB_RSVD9	TP_SB_RSVD9 - @m39_lib.M39	22A6
TP_SB_SATALED_L	TP_SB_SATALED_L - @m39_lib.M39	21C6
TP_SB_XOR_AD5	TP_SB_XOR_AD5 - @m39_lib.M39	22A7
TP_SB_XOR_AD9	TP_SB_XOR_AD9 - @m39_lib.M39	22A7
TP_SB_XOR_AE5	TP_SB_XOR_AE5 - @m39_lib.M39	22A7
TP_SB_XOR_AE9	TP_SB_XOR_AE9 - @m39_lib.M39	22A6
TP_SB_XOR_AG4	TP_SB_XOR_AG4 - @m39_lib.M39	22A7
TP_SB_XOR_AG8	TP_SB_XOR_AG8 - @m39_lib.M39	22A6
TP_SB_XOR_AH4	TP_SB_XOR_AH4 - @m39_lib.M39	22A7
TP_SB_XOR_AH8	TP_SB_XOR_AH8 - @m39_lib.M39	22A6
TP_SB_XOR_T5	TP_SB_XOR_T5 - @m39_lib.M39	21C6
TP_SB_XOR_U3	TP_SB_XOR_U3 - @m39_lib.M39	21C6
TP_SB_XOR_U5	TP_SB_XOR_U5 - @m39_lib.M39	21C6
TP_SB_XOR_U7	TP_SB_XOR_U7 - @m39_lib.M39	21C6
TP_SB_XOR_V3	TP_SB_XOR_V3 - @m39_lib.M39	21C6
TP_SB_XOR_V4	TP_SB_XOR_V4 - @m39_lib.M39	21C6
TP_SB_XOR_V6	TP_SB_XOR_V6 - @m39_lib.M39	21C6
TP_SB_XOR_V7	TP_SB_XOR_V7 - @m39_lib.M39	21C6
TP_SB_XOR_W1	TP_SB_XOR_W1 - @m39_lib.M39	21C6
TP_SB_XOR_W3	TP_SB_XOR_W3 - @m39_lib.M39	21C6
TP_SB_XOR_Y1	TP_SB_XOR_Y1 - @m39_lib.M39	21C6
TP_SB_XOR_Y2	TP_SB_XOR_Y2 - @m39_lib.M39	21C6
TP_U5999_P1	TP_U5999_P1 - @m39_lib.M39	59A7
TP_U5999_P13	TP_U5999_P13 - @m39_lib.M39	59A5
TP_U5999_P14	TP_U5999_P14 - @m39_lib.M39	59A5
TP_U8400_AG14	TP_U8400_AG14 - @m39_lib.M39	91A5
TP_U8900_J2	TP_U8900_J2 - @m39_lib.M39	89A7
TP_U8900_J3	TP_U8900_J3 - @m39_lib.M39	89A7
TP_U8950_J2	TP_U8950_J2 - @m39_lib.M39	89A4
TP_U8950_J3	TP_U8950_J3 - @m39_lib.M39	89A4
TP_U9000_J2	TP_U9000_J2 - @m39_lib.M39	90A7
TP_U9000_J3	TP_U9000_J3 - @m39_lib.M39	90A7
TP_U9050_J2	TP_U9050_J2 - @m39_lib.M39	90A4
TP_U9050_J3	TP_U9050_J3 - @m39_lib.M39	90A4
TSENSE_GPU_DXP	TSENSE_GPU_DXP - @m39_lib.M39	61C5
TSENSE_NB_DXP	TSENSE_NB_DXP - @m39_lib.M39	61B5
TSENSE_NB_GPU_DXN	TSENSE_NB_GPU_DXN - @m39_lib.M39	61B5
TV_DACA_OUT	TV_DACA_OUT - @m39_lib.M39	13C5 19B1
	TV_DACB_OUT - @m39_lib.M39	13C5 19B1
	TV_DACC_OUT - @m39_lib.M39	13C5 19B1
	TV_IRTNA - @m39_lib.M39	13C5 19B1
	TV_IRTNB - @m39_lib.M39	13C5 19B1
	TV_IRTNC - @m39_lib.M39	13C5 19B1
	TV_IREF - @m39_lib.M39	13C5 19B1
	PP3V3_S0_NB_VCCA_TVBG -	17C6 19B1
	@m39_lib.M39	
	PP3V3_S0_NB_VCCA_TVDACC -	17C6 19B1
	@m39_lib.M39	
	PP3V3_S0_NB_VCCA_TVDACB -	17C6 19B1
	@m39_lib.M39	
	PP3V3_S0_NB_VCCA_TVDACA -	17C6 19B1
	@m39_lib.M39	
	=PP1V5_S0_NB_TVDAC - @m39_lib.M39	6C4 19B2 19D7
	=PP1V5_S0_AIRPORT - @m39_lib.M39	6C4 53D3
	PP1V5_S0 - @m39_lib.M39	6C6 80C2
	=PP1V5_S0_SB - @m39_lib.M39	6C4 25A8 25C8
	=PP1V5_S0_SB_VCC1_5_A -	6C4 24A3 25C1
	@m39_lib.M39	
	=PP1V5_S0_SB_VCC1_5_A_USB_CORE -	6C4 24A3 25B1
	@m39_lib.M39	
	=PP1V5_S0_SB_VCCUSBPLL -	6C4 24A5 25B6
	@m39_lib.M39	
	=PP1V5_S0_SB_VCC1_5_A_ATX -	6C4 24A5 25C6
	@m39_lib.M39	
	=PP1V5_S0_SB_VCCSATAPLL -	6C4 24B5 25D6
	@m39_lib.M39	
	=PP1V5_S0_SB_VCC1_5_A_ARX -	6C4 24B5 25D6
	@m39_lib.M39	
	=PP1V5_S0_NB_3GPLL - @m39_lib.M39	6C4 19A6 19A6
	=PP1V5_S0_NB_PLL - @m39_lib.M39	6C4 19C8 19D7
	=PP1V5_S0_NB_VCCAUX - @m39_lib.M39	6C4 6C4 16D1 17B6 19A7
		19D7
	=PP1V5_S0_NB_VCCD_HMPLL -	6C4 17C6 19D7
	@m39_lib.M39	
	=PP1V5_S0_NB_PCIE - @m39_lib.M39	6C4 13D2 19D7
	=PP1V5_S0_CPU - @m39_lib.M39	6C4 8B6 8C5
	TV_IRTNC - @m39_lib.M39	13C5 19B1
	TV_IRTNB - @m39_lib.M39	13C5 19B1
	TV_IRTNA - @m39_lib.M39	13C5 19B1
	TV_IREF - @m39_lib.M39	13C5 19B1
	TV_DACC_OUT - @m39_lib.M39	13C5 19B1
	TV_DACB_OUT - @m39_lib.M39	13C5 19B1
	PP3V3_S0_NB_VCCA_TVDACC -	17C6 19B1
	@m39_lib.M39	
	PP3V3_S0_NB_VCCA_TVDACB -	17C6 19B1
	@m39_lib.M39	
	PP3V3_S0_NB_VCCA_TVDACA -	17C6 19B1
	@m39_lib.M39	
	PP3V3_S0_NB_VCCA_TVBG -	17C6 19B1
	@m39_lib.M39	
	PP1V5_S0 - @m39_lib.M39	6C6 80C2
	=PP1V5_S0_SB_VCCUSBPLL -	6C4 24A5 25B6
	@m39_lib.M39	
	=PP1V5_S0_SB_VCCSATAPLL -	6C4 24B5 25D6
	@m39_lib.M39	
	=PP1V5_S0_SB_VCC1_5_A_USB_CORE -	6C4 24A3 25B1
	@m39_lib.M39	
	=PP1V5_S0_SB_VCC1_5_A_ATX -	6C4 24A5 25C6
	@m39_lib.M39	
	=PP1V5_S0_SB_VCC1_5_A_ARX -	6C4 24B5 25D6
	@m39_lib.M39	
	=PP1V5_S0_SB_VCC1_5_A -	6C4 24A3 25C1
	@m39_lib.M39	
	=PP1V5_S0_SB - @m39_lib.M39	6C4 25A8 25C8
	=PP1V5_S0_NB_VCCD_HMPLL -	6C4 17C6 19D7
	@m39_lib.M39	
	=PP1V5_S0_NB_VCCAUX - @m39_lib.M39	6C4 6C4 16D1 17B6 19A7
		19D7
	=PP1V5_S0_NB_TVDAC - @m39_lib.M39	6C4 19B2 19D7
	=PP1V5_S0_NB_PLL - @m39_lib.M39	6C4 19C8 19D7
	=PP1V5_S0_NB_PCIE - @m39_lib.M39	6C4 13D2 19D7
	=PP1V5_S0_NB_3GPLL - @m39_lib.M39	6C4 19A6 19A6
	=PP1V5_S0_NB - @m39_lib.M39	6C4 19B2 19D7
	=PP1V5_S0_CPU - @m39_lib.M39	6C4 8B6 8C5

	=PP1V5_S0_AIRPORT - @m39_lib.M39	6C4 53D3
U600_3	U600_3 - @m39_lib.M39	6C7
U600_6	U600_6 - @m39_lib.M39	6B7
U600_8	U600_8 - @m39_lib.M39	6B7
U600_11	U600_11 - @m39_lib.M39	6A7
U2698_4	U2698_4 - @m39_lib.M39	26C4
U3100_VDDQ	U3100_VDDQ - @m39_lib.M39	31C5
U6100_VCC	U6100_VCC - @m39_lib.M39	61C4
U8595_1	U8595_1 - @m39_lib.M39	85D2
USB_AIRPORT_N	USB_AIRPORT_N - @m39_lib.M39	53B4
USB_AIRPORT_P	USB_AIRPORT_P - @m39_lib.M39	53B4
USB_A_N	USB_A_N - @m39_lib.M39	22C2 47D7
USB_A_OC_L	USB_A_OC_L - @m39_lib.M39	22C4 22D8 47B8 47B8
USB_A_P	USB_A_P - @m39_lib.M39	22C2 47C7
USB_B_N	USB_B_N - @m39_lib.M39	22C2 53B2
USB_B_OC_L	USB_B_OC_L - @m39_lib.M39	22C4 22D8 47B8
USB_B_P	USB_B_P - @m39_lib.M39	22C2 53B2
USB_CAMERA_N	USB_CAMERA_N - @m39_lib.M39	47B2
USB_CAMERA_P	USB_CAMERA_P - @m39_lib.M39	47B2
USB_C_N	USB_C_N - @m39_lib.M39	22C2 47B7
USB_C_OC_L	USB_C_OC_L - @m39_lib.M39	22C4 22D8 47B7 47B8
USB_C_P	USB_C_P - @m39_lib.M39	22C2 47B7
USB_D_N	USB_D_N - @m39_lib.M39	22C2 47B3
USB_D_OC_L	USB_D_OC_L - @m39_lib.M39	22C4 22D8 47B7
USB_D_P	USB_D_P - @m39_lib.M39	22C2 47B3
USB_E_N	USB_E_N - @m39_lib.M39	22C2 47A7
USB_E_OC_L	USB_E_OC_L - @m39_lib.M39	22C4 22D8 47B7
USB_E_P	USB_E_P - @m39_lib.M39	22C2 47A7
USB_F_N	USB_F_N - @m39_lib.M39	22C2 49C6
	USB_FLASH_N - @m39_lib.M39	49C5
USB_F_P	USB_F_P - @m39_lib.M39	22C2 49C6
	USB_FLASH_P - @m39_lib.M39	49C5
USB_G_N	USB_G_N - @m39_lib.M39	22C2 47A3
	USB_BT_N - @m39_lib.M39	47A3
USB_G_P	USB_G_P - @m39_lib.M39	22C2 47A3
	USB_BT_P - @m39_lib.M39	47A3
USB_H_N	USB_H_N - @m39_lib.M39	22C2 47C3
USB_H_P	USB_H_P - @m39_lib.M39	22C2 47C3
USB_IR_N	USB_IR_N - @m39_lib.M39	47C2
USB_IR_P	USB_IR_P - @m39_lib.M39	47C2
USB_PORT0_N	USB_PORT0_N - @m39_lib.M39	47D5
USB_PORT0_P	USB_PORT0_P - @m39_lib.M39	47C5
USB_PORT1_N	USB_PORT1_N - @m39_lib.M39	47B5
USB_PORT1_P	USB_PORT1_P - @m39_lib.M39	47B5
USB_PORT2_N	USB_PORT2_N - @m39_lib.M39	47A5
USB_PORT2_P	USB_PORT2_P - @m39_lib.M39	47A5
USB_RBIAS_PN	USB_RBIAS_PN - @m39_lib.M39	22C2
VGA_B	VGA_B - @m39_lib.M39	97B6 97C5
VGA_G	VGA_G - @m39_lib.M39	97A6 97C5
VGA_HSYNC	VGA_HSYNC - @m39_lib.M39	97A3 97C5
VGA_R	VGA_R - @m39_lib.M39	97A6 97C5
VGA_VSYNC	VGA_VSYNC - @m39_lib.M39	97A3 97C5
VMAIN_AVLBL	VMAIN_AVLBL - @m39_lib.M39	41C7
VOL_DOWN	VOL_DOWN - @m39_lib.M39	68A6 68C7
VOL_UP	VOL_UP - @m39_lib.M39	68A6 68C7
VREG_FB	VREG_FB - @m39_lib.M39	68A3
VR_PWRGD_CK410	VR_PWRGD_CK410 - @m39_lib.M39	23C5 26A8
VR_PWRGOOD_DELAY	VR_PWRGOOD_DELAY - @m39_lib.M39	5C7 14B6 26D5 75C6
XDP_BPM_L<0>	XDP_BPM_L<0> - @m39_lib.M39	7C6 11B3
XDP_BPM_L<1>	XDP_BPM_L<1> - @m39_lib.M39	7C6 11B3
XDP_BPM_L<2>	XDP_BPM_L<2> - @m39_lib.M39	7C6 11B3
XDP_BPM_L<3>	XDP_BPM_L<3> - @m39_lib.M39	7C6 11B3
XDP_BPM_L<4>	XDP_BPM_L<4> - @m39_lib.M39	7C6 11B3
XDP_BPM_L<5>	XDP_BPM_L<5> - @m39_lib.M39	7C6 11B3
XDP_DBRESET_L	XDP_DBRESET_L - @m39_lib.M39	7C6 11B4 26B5
XDP_TCK	XDP_TCK - @m39_lib.M39	5D1 7A8 7C6 11B3 11B3
		59A1 59A6
XDP_TDI	XDP_TDI - @m39_lib.M39	5D1 7B8 7C6 11B3 59B2
XDP_TDO	XDP_TDO - @m39_lib.M39	5D1 7C6 11B5 59A6
XDP_TMS	XDP_TMS - @m39_lib.M39	5D1 7B8 7C6 11B3 59B1
XDP_TRST_L	XDP_TRST_L - @m39_lib.M39	5D1 7C6 11B3 59A2
ZH701P1	ZH701P1 - @m39_lib.M39	6A3
ZH702P1	ZH702P1 - @m39_lib.M39	6A3
ZH703P1	ZH703P1 - @m39_lib.M39	6A3

www.teknisi-indonesia.com

Title: Cref Part Report
Design: m39
Date: Nov 15 18:33:07 2005

C85A0	CAP_402	m39[85D1]
C600	CAP_402	m39[6C7]
C601	CAP_402	m39[6A3]
C602	CAP_402	m39[6A3]
C603	CAP_402	m39[6A3]
C610	CAP_402	m39[6C7]
C699	CAP_P_CASE-C1	m39[6D7]
C0800	CAP_402	m39[8B5]
C0801	CAP_603	m39[8B5]
C900	CAP_805	m39[9B6]
C901	CAP_805	m39[9B6]
C902	CAP_805	m39[9A6]
C903	CAP_805	m39[9A6]
C904	CAP_805	m39[9A6]
C905	CAP_805	m39[9A6]
C906	CAP_805	m39[9A6]
C907	CAP_805	m39[9B5]
C908	CAP_805	m39[9B7]
C909	CAP_805	m39[9B5]
C910	CAP_805	m39[9B7]
C911	CAP_805	m39[9B7]
C912	CAP_805	m39[9A7]
C913	CAP_805	m39[9A7]
C914	CAP_805	m39[9A7]
C915	CAP_805	m39[9A7]
C916	CAP_805	m39[9A7]
C917	CAP_805	m39[9A7]
C918	CAP_805	m39[9A7]
C919	CAP_805	m39[9A7]
C920	CAP_805	m39[9A5]
C921	CAP_805	m39[9A7]
C922	CAP_805	m39[9A7]
C923	CAP_805	m39[9B7]
C924	CAP_805	m39[9A7]
C925	CAP_805	m39[9A7]
C926	CAP_402	m39[9B7]
C928	CAP_805	m39[9B6]
C929	CAP_805	m39[9B5]
C930	CAP_805	m39[9A6]
C931	CAP_805	m39[9A5]
C932	CAP_805	m39[9A6]
C934	CAP_402	m39[9B7]
C935	CAP_402	m39[9B7]
C936	CAP_402	m39[9B7]
C937	CAP_402	m39[9B6]
C938	CAP_402	m39[9B6]
C939	CAP_805	m39[9A5]
C940	CAP_P_CASE-C1	m39[9C7]
C941	CAP_P_3P_D2T	m39[9A7]
C942	CAP_P_3P_D2T	m39[9A7]
C943	CAP_P_3P_D2T	m39[9A7]
C944	CAP_P_3P_D2T	m39[9A7]
C945	CAP_P_3P_D2T	m39[9A6]
C946	CAP_P_3P_D2T	m39[9A6]
C950	CAP_402	m39[9D4]
C951	CAP_402	m39[9D3]
C952	CAP_402	m39[9D3]
C953	CAP_402	m39[9D2]
C1000	CAP_402	m39[10C6]
C1001	CAP_402	m39[10D4]
C1100	CAP_402	m39[11A3]
C1211	CAP_402	m39[12C3]
C1226	CAP_402	m39[12B6]
C1236	CAP_402	m39[12A6]
C1610	CAP_402	m39[16B5]
C1611	CAP_402	m39[16B4]
C1612	CAP_402	m39[16B4]
C1613	CAP_402	m39[16B8]
C1614	CAP_402	m39[16B8]
C1615	CAP_402	m39[16B6]
C1620	CAP_603	m39[16B5]
C1621	CAP_603	m39[16B5]
C1711	CAP_402	m39[17A3]
C1712	CAP_402	m39[17A3]
C1713	CAP_402	m39[17B3]
C1900	CAP_P_CASE-C1	m39[19B5]
C1901	CAP_P_CASE-C1	m39[19B5]
C1902	CAP_603	m39[19B5]
C1903	CAP_603	m39[19B4]
C1904	CAP_402	m39[19B4]
C1905	CAP_402	m39[19B4]
C1906	CAP_402	m39[19B3]
C1907	CAP_402	m39[19B3]
C1914	CAP_603	m39[19A8]
C1915	CAP_402	m39[19A7]
C1916	CAP_402	m39[19A8]
C1918	CAP_402	m39[19A7]
C1920	CAP_402	m39[19A2]
C1921	FILTER_3P_A_NFM18	m39[19B2]
C1934	CAP_805	m39[19C7]
C1935	CAP_402	m39[19C7]
C1936	CAP_805	m39[19C7]
C1937	CAP_402	m39[19C7]
C1965	CAP_603	m39[19B8]
C1966	CAP_603	m39[19B7]
C1967	CAP_402	m39[19B7]
C1968	CAP_P_CASE-C1	m39[19B7]
C1970	CAP_P_SMB2	m39[19A5]
C1971	CAP_603	m39[19A4]
C1972	CAP_603	m39[19A4]
C1975	CAP_603	m39[19A4]
C1976	CAP_402	m39[19A4]
C1981	CAP_603	m39[19B6]
C1982	CAP_603	m39[19B8]
C2500	CAP_P_SMB2	m39[25B8]
C2501	CAP_402	m39[25A6]
C2502	CAP_402	m39[25D4]
C2503	CAP_402	m39[25D8]
C2504	CAP_402	m39[25C8]
C2505	CAP_402	m39[25B7]
C2506	CAP_402	m39[25B7]
C2507	CAP_402	m39[25B7]
C2508	CAP_603	m39[25A6]
C2509	CAP_402	m39[25B8]
C2510	CAP_402	m39[25C1]
C2511	CAP_402	m39[25D6]
C2512	CAP_402	m39[25B1]
C2513	CAP_402	m39[25C6]
C2514	CAP_402	m39[25C6]
C2515	CAP_402	m39[25B6]
C2516	CAP_P_CASE-C2	m39[25D3]
C2517	CAP_402	m39[25D6]
C2518	CAP_402	m39[25D4]
C2519	CAP_402	m39[25D3]
C2520	CAP_402	m39[25B6]
C2521	CAP_402	m39[25C3]
C2522	CAP_402	m39[25B3]
C2523	CAP_402	m39[25B4]
C2524	CAP_603	m39[25B3]
C2525	CAP_402	m39[25B3]
C2526	CAP_402	m39[25A4]
C2527	CAP_402	m39[25A3]
C2528	CAP_402	m39[25A3]
C2529	CAP_402	m39[25A3]
C2530	CAP_402	m39[25A3]
C2531	CAP_402	m39[25D1]
C2532	CAP_402	m39[25C1]
C2533	CAP_402	m39[25C1]
C2534	CAP_402	m39[25D1]
C2605	CAP_402	m39[26C7]
C2607	CAP_402	m39[26D5]
C2608	CAP_402	m39[26D8]
C2609	CAP_402	m39[26D8]
C2610	CAP_402	m39[26C7]
C2611	CAP_402	m39[26B7]
C2698	CAP_402	m39[26C4]
C2699	CAP_402	m39[26C5]
C2800	CAP_402	m39[28D6]
C2801	CAP_603	m39[28B2]
C2802	CAP_603	m39[28B2]
C2803	CAP_603	m39[28B1]
C2804	CAP_603	m39[28B1]
C2810	CAP_402	m39[28B2]
C2811	CAP_402	m39[28B2]
C2812	CAP_402	m39[28B1]
C2813	CAP_402	m39[28B1]
C2814	CAP_402	m39[28B2]
C2815	CAP_402	m39[28B2]
C2816	CAP_402	m39[28B1]
C2817	CAP_402	m39[28B1]
C2818	CAP_402	m39[28B2]
C2819	CAP_402	m39[28B2]
C2820	CAP_402	m39[28B1]
C2821	CAP_402	m39[28B1]
C2850	CAP_603	m39[28D6]
C2851	CAP_603	m39[28A6]
C2852	CAP_402	m39[28A6]
C2900	CAP_402	m39[29D6]
C2908	CAP_402	m39[29B2]
C2909	CAP_402	m39[29B2]
C2910	CAP_402	m39[29B1]
C2911	CAP_402	m39[29B1]
C2912	CAP_402	m39[29B2]
C2913	CAP_402	m39[29B2]
C2914	CAP_402	m39[29B1]
C2915	CAP_402	m39[29B1]
C2916	CAP_402	m39[29B2]
C2917	CAP_402	m39[29B2]
C2918	CAP_402	m39[29B1]
C2919	CAP_402	m39[29B1]
C2920	CAP_402	m39[29B2]
C2921	CAP_402	m39[29B2]
C2922	CAP_402	m39[29B1]
C2923	CAP_402	m39[29B1]
C2950	CAP_603	m39[29D6]
C2951	CAP_603	m39[29A7]
C2952	CAP_402	m39[29A6]
C3004	CAP_402	m39[30B4]
C3005	CAP_402	m39[30D4]
C3006	CAP_402	m39[30B3]
C3007	CAP_402	m39[30D3]
C3008	CAP_402	m39[30A3]
C3009	CAP_402	m39[30A4]
C3010	CAP_402	m39[30D4]
C3011	CAP_402	m39[30D3]
C3013	CAP_402	m39[30A4]
C3014	CAP_402	m39[30A4]
C3015	CAP_402	m39[30A3]
C3030	CAP_402	m39[30C4]
C3033	CAP_402	m39[30C3]
C3035	CAP_402	m39[30C3]
C3100	CAP_402	m39[31C4]
C3101	CAP_603	m39[31B6]
C3102	CAP_603	m39[31B4]
C3105	CAP_P_SMC-LF	m39[31B4]
C3109	CAP_603	m39[31C5]
C3110	CAP_402	m39[31B6]
C3301	CAP_402	m39[33D6]
C3302	CAP_402	m39[33D6]
C3303	CAP_402	m39[33D6]
C3304	CAP_402	m39[33D6]
C3305	CAP_402	m39[33D4]
C3306	CAP_402	m39[33D4]
C3307	CAP_402	m39[33C4]
C3308	CAP_402	m39[33D4]
C3309	CAP_603	m39[33D4]
C3310	CAP_402	m39[33D3]
C3311	CAP_402	m39[33C6]
C3312	CAP_603	m39[33C6]
C3314	CAP_402	m39[33D8]
C3315	CAP_402	m39[33D7]
C3316	CAP_603	m39[33D7]
C3317	CAP_603	m39[33D4]
C3389	CAP_402	m39[33C7]
C3390	CAP_402	m39[33C7]
C3800	CAP_402	m39[38B7]
C3801	CAP_402	m39[38B7]
C3802	CAP_402	m39[38B7]
C3803	CAP_402	m39[38B7]
C3804	CAP_402	m39[38C3]
C3805	CAP_402	m39[38C2]
C3806	CAP_805-2	m39[38C1]
C4101	CAP_402	m39[41D7]
C4102	CAP_402	m39[41D6]
C4103	CAP_402	m39[41D6]
C4104	CAP_402	m39[41D6]
C4105	CAP_402	m39[41D5]
C4106	CAP_402	m39[41D2]
C4107	CAP_402	m39[41D2]
C4110	CAP_402	m39[41D4]
C4111	CAP_402	m39[41D4]
C4112	CAP_402	m39[41C4]
C4113	CAP_402	m39[41C4]
C4115	CAP_402	m39[41B5]
C4116	CAP_402	m39[41B5]
C4117	CAP_402	m39[41B2]
C4118	CAP_402	m39[41B2]
C4126	CAP_402	m39[41A8]
C4127	CAP_402	m39[41A8]
C4128	CAP_402	m39[41A8]
C4129	CAP_402	m39[41A8]
C4130	CAP_402	m39[41A7]
C4131	CAP_402	m39[41A7]
C4132	CAP_402	m39[41A7]
C4133	CAP_402	m39[41A6]
C4134	CAP_402	m39[41A6]
C4135	CAP_402	m39[41A5]
C4136	CAP_402	m39[41A5]
C4137	CAP_402	m39[41A5]
C4138	CAP_402	m39[41A4]
C4139	CAP_402	m39[41A4]
C4140	CAP_402	m39[41B3]
C4150	CAP_402	m39[41D5]
C4200	CAP_1210	m39[42D8]
C4201	CAP_402	m39[42D7]
C4202	CAP_1210	m39[42D7]
C4203	CAP_1206-1	m39[42D6]
C4204	CAP_402	m39[42D6]
C4205	CAP_1210	m39[42C5]
C4206	CAP_402	m39[42C5]
C4209	CAP_603	m39[42B7]
C4210	CAP_402	m39[42B6]
C4300	CAP_402	m39[43D7]
C4301	CAP_402	m39[43D6]
C4304	CAP_402	m39[43C6]
C4305	CAP_402	m39[43B6]
C4401	CAP_402	m39[44D1]
C4402	CAP_402	m39[44C1]
C4410	CAP_402	m39[44D6]
C4412	CAP_402	m39[44D1]
C4500	CAP_402	m39[45D4]
C4501	CAP_402	m39[45D3]
C4502	CAP_402	m39[45D3]
C4503	CAP_603	m39[45C6]
C4504	CAP_402	m39[45C4]
C4505	CAP_402	m39[45C5]
C4506	CAP_402	m39[45C5]
C4507	CAP_402	m39[45C5]
C4508	CAP_402	m39[45D5]
C4509	CAP_402	m39[45D5]
C4510	CAP_402	m39[45D5]
C4515	CAP_603	m39[45D6]
C4520	CAP_402	m39[45D5]
C4521	CAP_402	m39[45D4]
C4522	CAP_402	m39[45D3]
C4523	CAP_402	m39[45D3]
C4609	CAP_603-1	m39[46D5]
C4610	CAP_402	m39[46D4]
C4611	CAP_402	m39[46D4]
C4612	CAP_402	m39[46C4]
C4613	CAP_402	m39[46C4]
C4615	CAP_603-1	m39[46C2]
C4616	CAP_402	m39[46B2]
C4620	CAP_402	m39[46B4]
C4621	CAP_402	m39[46B4]
C4622	CAP_402	m39[46B4]
C4623	CAP_402	m39[46A4]
C4625	CAP_603-1	m39[46A2]
C4626	CAP_402	m39[46A2]
C4650	CAP_402	m39[46C7]
C4654	CAP_402	m39[46B8]
C4660	CAP_402	m39[46C7]
C4664	CAP_402	m39[46B7]
C4710	CAP_P_SMD2	m39[47D6]
C4712	CAP_402	m39[47D5]
C4713	CAP_402	m39[47D5]
C4720	CAP_P_SMD	m39[47C6]
C4722	CAP_402	m39[47C5]
C4723	CAP_402	m39[47C5]
C4732	CAP_402	m39[47A5]
C4733	CAP_402	m39[47A5]
C4742	CAP_402	m39[47D2]
C4743	CAP_402	m39[47D1]
C4797	CAP_805-2	m39[47D3]
C4798	CAP_402	m39[47A2]
C4799	CAP_805-2	m39[47A2]
C4950	CAP_805-2	m39[49C4]
C4951	CAP_402	m39[49C4]
C5300	CAP_402	m39[53B7]
C5301	CAP_402	m39[53B7]
C5304	CAP_402	m39[53D5]
C5305	CAP_402	m39[53D5]
C5306	CAP_402	m39[53D4]
C5307	CAP_402	m39[53C4]
C5308	CAP_402	m39[53C5]
C5309	CAP_402	m39[53C4]
C5310	CAP_402	m39[53C4]
C5311	CAP_603	m39[53C3]
C5312	CAP_603	m39[53D4]
C5313	CAP_402	m39[53C5]
C5314	CAP_603	m39[53C4]
C5800	CAP_402	m39[59B8]
C5801	CAP_402	m39[59B8]
C5802	CAP_805	m39[58D3]
C5803	CAP_402	m39[58D2]
C5804	CAP_402	m39[58D2]
C5805	CAP_402	m39[58D2]
C5806	CAP_402	m39[58D1]
C5807	CAP_402	m39[58D2]
C5828	CAP_402	m39[58C3]
C5900	CAP_402	m39[59D8]
C5901	CAP_402	m39[59D8]
C5902	CAP_402	m39[59B7]
C5903	CAP_402	m39[59A8]
C5919	CAP_402	m39[59B4]
C5940	CAP_402	m39[59A4]
C5941	CAP_402	m39[59A3]
C5942	CAP_603	m39[59A3]
C5943	CAP_402	m39[59A5]
C6000	CAP_402	m39[60D6]
C6001	CAP_402	m39[60D6]
C6002	CAP_402	m39[60C6]
C6003	CAP_402	m39[60C6]
C6100	CAP_402	m39[61B5]
C6101	CAP_402	m39[61B5]
C6301	CAP_402	m39[63C2]
C6308	CAP_402	m39[63C5]
C6309	CAP_402	m39[63C6]
C6311	CAP_402	m39[63C2]
C6312	CAP_402	m39[63D3]
C6500	CAP_603	m39[65D5]
C6501	CAP_805	m39[65D5]
C6502	CAP_603	m39[65B4]
C6503	CAP_805	m39[65B5]
C6504	CAP_P_6.3X11-TH-LF	m39[65C4]
C6505	CAP_P_6.3X11-TH-LF	m39[65B3]
C6600	CAP_603	m39[66D4]
C6601	CAP_805	m39[66C5]
C6602	CAP_P_SM-LF	m39[66C3]
C6650	CAP_402	m39[66B5]
C6651	CAP_402	m39[66A5]
C6652	CAP_402	m39[66B3]
C6653	CAP_402	m39[66A3]
C6654	CAP_402	m39[66B4]
C6655	CAP_402	m39[66B2]
C6700	CAP_402	m39[67C4]
C6701	CAP_402	m39[67C4]
C6702	CAP_402	m39[67C3]
C6703	CAP_402	m39[67C3]
C6704	CAP_402	m39[59B7]
C6705	CAP_402	m39[59B7]
C6800	CAP_603	m39[68D6]
C6801	CAP_402	m39[68D6]
C6802	CAP_P_B2	m39[68D4]
C6803	CAP_P_B2	m39[68D3]
C6804	CAP_P_SMA-LF	m39[68B4]
C6805	CAP_805	m39[68B3]
C6806	CAP_805	m39[68B3]
C6807	CAP_P_SMA-LF	m39[68B3]
C6808	CAP_402	m39[68B3]
C6809	CAP_402	m39[68B2]
C6810	CAP_P_SMA-LF	m39[68B2]
C6811	CAP_402	m39[68B2]
C6812	CAP_402	m39[68B4]
C6813	CAP_402	m39[68B3]
C6821	CAP_402	m39[68C6]
C6822	CAP_603	m39[68A5]
C6823	CAP_402	m39[68A4]
C6825	CAP_402	m39[68A3]
C6826	CAP_603	m39[68A3]
C6829	CAP_402	m39[68B3]
C6830	CAP_402	m39[68D4]
C6832	CAP_402	m39[68B2]
C6833	CAP_402	m39[68B2]
C6834	CAP_402	m39[68B2]
C6835	CAP_402	m39[68D6]
C6836	CAP_402	m39[68D3]
C7200	CAP_P_6.3X8-SM	m39[72D5]
C7201	CAP_1210	m39[72D5]
C7202	CAP_805	m39[72D4]
C7203	CAP_1210	m39[72D3]
C7204	CAP_805	m39[72D6]
C7205	CAP_805	m39[72C6]
C7206	CAP_805	m39[72C6]
C7207	CAP_805	m39[72C6]
C7208	CAP_603-1	m39[72C4]
C7209	CAP_805	m39[72B4]
C7210	CAP_402	m39[72B3]
C7211	CAP_402	m39[72B2]
C7212	CAP_402	m39[72B2]
C7213	CAP_402	m39[72B2]
C7214	CAP_603	m39[72B5]
C7215	CAP_402	m39[72C6]
C7216	CAP_402	m39[72C6]
C7217	CAP_P_6.3X8-SM	m39[72D6]
C7218	CAP_603	m39[72D5]
C7219	CAP_603	m39[72D4]
C7220	CAP_402	m39[72B7]
C7221	CAP_402	m39[72B7]
C7223	CAP_1210	m39[72D3]
C7300	CAP_402	m39[73D7]
C7301	CAP_402	m39[73D6]
C7302	CAP_402	m39[73D6]
C7303	CAP_402	m39[73D6]
C7311	CAP_402	m39[73A7]
C7312	CAP_402	m39[73A6]
C7313	CAP_402	m39[73A6]
C7314	CAP_402	m39[73A7]
C7315	CAP_402	m39[73A6]
C7317	CAP_402	m39[73B4]
C7318	CAP_805	m39[73B4]
C7321	CAP_402	m39[73C5]
C7322	CAP_402	m39[73C5]
C7323	CAP_402	m39[73A6]
C7324	CAP_402	m39[73A5]
C7400	CAP_402	m39[74B4]
C7401	CAP_402	m39[74C4]
C7402	CAP_402	m39[74A4]
C7403	CAP_P_CASE-B-SM	m39[74B7]
C7404	CAP_P_CASE-B-SM	m39[74B6]
C7405	CAP_P_CASE-B-SM	m39[74C7]
C7406	CAP_P_CASE-B-SM	m39[74C6]
C7407	CAP_402	m39[74D8]
C7408	CAP_402	m39[74D7]
C7409	CAP_402	m39[74B8]
C7410	CAP_402	m39[74A8]
C7411	CAP_402	m39[74B8]
C7412	CAP_402	m39[74A8]
C7413	CAP_402	m39[74A8]
C7414	CAP_402	m39[74A7]
C7415	CAP_402	m39[74A8]
C7416	CAP_402	m39[74A8]
C7417	CAP_402	m39[74A8]
C7418	CAP_805	m39[74A5]
C7419	CAP_603-1	m39[74A4]
C7420	CAP_402	m39[74A7]
C7421	CAP_402	m39[74A7]
C7422	CAP_402	m39[74A7]
C7423	CAP_402	m39[74A7]
C7500	CAP_402	m39[75C4]
C7501	CAP_P_TH-MCZ	m39[75C2]
C7502	CAP_402	m39[75B4]
C7503	CAP_402	m39[75C1]
C7504	CAP_402	m39[75B1]
C7505	CAP_402	m39[75C8]
C7506	CAP_402	m39[75B7]
C7507	CAP_402	m39[75B7]
C7508	CAP_1210	m39[75C2]
C7509	CAP_1210	m39[75D1]
C7510	CAP_402	m39[75C8]
C7511	CAP_603	m39[75B2]

www.teknisi-indonesia.com

C7512	CAP_603	m39[75C2]
C7513	CAP_402	m39[75B7]
C7514	CAP_402	m39[75B8]
C7515	CAP_603	m39[75C4]
C7516	CAP_402	m39[75B4]
C7517	CAP_P_SM-3	m39[75D2]
C7518	CAP_P_SM-3	m39[75D2]
C7521	CAP_402	m39[75A6]
C7526	CAP_603	m39[75D6]
C7527	CAP_603	m39[75C5]
C7528	CAP_402	m39[75B5]
C7529	CAP_402	m39[75B5]
C7530	CAP_402	m39[75D6]
C7531	CAP_402	m39[75B5]
C7532	CAP_402	m39[75B6]
C7533	CAP_402	m39[75B6]
C7534	CAP_402	m39[75B5]
C7535	CAP_603	m39[75D5]
C7550	CAP_603	m39[75D1]
C7551	CAP_603	m39[75D1]
C7590	CAP_402	m39[75C3]
C7592	CAP_402	m39[75B3]
C7596	CAP_402	m39[75D6]
C7597	CAP_1210	m39[75D1]
C7598	CAP_1210	m39[75D1]
C7599	CAP_402	m39[76D6]
C7600	CAP_402	m39[76D3]
C7601	CAP_402	m39[76D3]
C7602	CAP_402	m39[76D2]
C7603	CAP_402	m39[76C4]
C7612	CAP_402	m39[76B2]
C7633	CAP_402	m39[76C7]
C7659	CAP_402	m39[76D4]
C7669	CAP_402	m39[76D4]
C7700	CAP_603	m39[77D4]
C7703	CAP_402	m39[77C4]
C7704	CAP_402	m39[77C4]
C7706	CAP_402	m39[77C4]
C7709	CAP_805	m39[77C3]
C7710	CAP_402	m39[77C7]
C7711	CAP_402	m39[77B7]
C7712	CAP_402	m39[77C7]
C7750	CAP_402	m39[77A5]
C7751	CAP_805	m39[77B4]
C7752	CAP_805	m39[77B4]
C7753	CAP_402	m39[77A7]
C7754	CAP_402	m39[77B6]
C7755	CAP_805	m39[77B3]
C7756	CAP_805	m39[77B3]
C7757	CAP_402	m39[77A6]
C7799	CAP_402	m39[77A3]
C7800	CAP_1210	m39[78C3]
C7801	CAP_P_SM-LF	m39[78C4]
C7802	CAP_603	m39[78C6]
C7803	CAP_603	m39[78B6]
C7804	CAP_402	m39[78C6]
C7805	CAP_603	m39[78C4]
C7806	CAP_805-1	m39[78B2]
C7807	CAP_P_CASE-D2E-LF	m39[78B3]
C7809	CAP_402	m39[78B3]
C7810	CAP_402	m39[78B4]
C7811	CAP_402	m39[78B5]
C7813	CAP_1206	m39[78B4]
C7814	CAP_402	m39[78B5]
C7817	CAP_P_CASE-D2E-LF	m39[78B2]
C7900	CAP_402	m39[79D6]
C7901	CAP_603	m39[79D5]
C7902	CAP_402	m39[79C5]
C7903	CAP_603	m39[79C7]
C7906	CAP_402	m39[79C5]
C7907	CAP_402	m39[79C3]
C7908	CAP_402	m39[79C5]
C7909	CAP_1206	m39[79C4]
C7910	CAP_P_SM-3	m39[79D4]
C7911	CAP_1210	m39[79D3]
C7912	CAP_P_CASE-D2E-LF	m39[79C3]
C7913	CAP_1206	m39[79C2]
C7980	CAP_402	m39[79B3]
C7992	CAP_603	m39[79D6]
C7998	CAP_P_CASE-D2E-LF	m39[79C3]
C8000	CAP_1210	m39[80D3]
C8001	CAP_P_CASE-D2E-LF	m39[80C3]
C8002	CAP_603	m39[80D6]
C8003	CAP_402	m39[80C3]
C8004	CAP_1206	m39[80C4]
C8005	CAP_402	m39[80C4]
C8006	CAP_402	m39[80D6]
C8009	CAP_603	m39[80C6]
C8010	CAP_603	m39[80C4]
C8011	CAP_402	m39[80C5]
C8012	CAP_402	m39[80C5]
C8014	CAP_P_TH-MCZ	m39[80D4]
C8015	CAP_1210	m39[80D3]
C8016	CAP_805-1	m39[80C2]
C8099	CAP_P_CASE-D2E-LF	m39[80C2]
C8100	CAP_402	m39[81D6]
C8101	CAP_603	m39[81C5]
C8102	CAP_402	m39[81C5]
C8103	CAP_603	m39[81C7]
C8106	CAP_402	m39[81C5]
C8107	CAP_402	m39[81C3]
C8108	CAP_402	m39[81C5]
C8109	CAP_1206	m39[81C4]
C8110	CAP_1210	m39[81D4]
C8111	CAP_1210	m39[81D3]
C8112	CAP_1210	m39[81D3]
C8114	CAP_P_CASE-D2E-LF	m39[81C3]
C8115	CAP_805-1	m39[81C2]
C8190	CAP_P_CASE-D2E-LF	m39[81C3]
C8192	CAP_603	m39[81D6]
C8198	CAP_1210	m39[81D3]
C8199	CAP_402	m39[81A5]
C8398	CAP_603	m39[83B4]
C8399	CAP_603	m39[83C4]
C8400	CAP_805	m39[84C7]
C8401	CAP_402	m39[84C7]
C8402	CAP_402	m39[84C7]
C8405	CAP_805	m39[84B7]
C8406	CAP_402	m39[84B7]
C8407	CAP_402	m39[84B7]
C8410	CAP_805	m39[84B6]
C8411	CAP_402	m39[84B7]
C8412	CAP_402	m39[84B7]
C8413	CAP_402	m39[84B7]

C8420	CAP_402	m39[84D5]
C8421	CAP_402	m39[84D5]
C8422	CAP_402	m39[84D5]
C8423	CAP_402	m39[84D5]
C8424	CAP_402	m39[84D5]
C8425	CAP_402	m39[84D5]
C8426	CAP_402	m39[84D5]
C8427	CAP_402	m39[84D5]
C8428	CAP_402	m39[84D5]
C8429	CAP_402	m39[84C5]
C8430	CAP_402	m39[84C5]
C8431	CAP_402	m39[84C5]
C8432	CAP_402	m39[84C5]
C8433	CAP_402	m39[84C5]
C8434	CAP_402	m39[84C5]
C8435	CAP_402	m39[84C5]
C8436	CAP_402	m39[84C5]
C8437	CAP_402	m39[84C5]
C8438	CAP_402	m39[84C5]
C8439	CAP_402	m39[84C5]
C8440	CAP_402	m39[84B5]
C8441	CAP_402	m39[84B5]
C8442	CAP_402	m39[84B5]
C8443	CAP_402	m39[84B5]
C8444	CAP_402	m39[84B5]
C8445	CAP_402	m39[84B5]
C8446	CAP_402	m39[84B5]
C8447	CAP_402	m39[84B5]
C8448	CAP_402	m39[84B5]
C8449	CAP_402	m39[84B5]
C8450	CAP_402	m39[84B5]
C8451	CAP_402	m39[84B5]
C8455	CAP_402	m39[84D2]
C8456	CAP_402	m39[84D2]
C8457	CAP_402	m39[84D2]
C8458	CAP_402	m39[84D2]
C8459	CAP_402	m39[84D2]
C8460	CAP_402	m39[84D2]
C8461	CAP_402	m39[84D2]
C8462	CAP_402	m39[84D2]
C8463	CAP_402	m39[84D2]
C8464	CAP_402	m39[84C2]
C8465	CAP_402	m39[84C2]
C8466	CAP_402	m39[84C2]
C8467	CAP_402	m39[84C2]
C8468	CAP_402	m39[84C2]
C8469	CAP_402	m39[84C2]
C8470	CAP_402	m39[84C2]
C8471	CAP_402	m39[84C2]
C8472	CAP_402	m39[84C2]
C8473	CAP_402	m39[84C2]
C8474	CAP_402	m39[84C2]
C8475	CAP_402	m39[84B2]
C8476	CAP_402	m39[84B2]
C8477	CAP_402	m39[84B2]
C8478	CAP_402	m39[84B2]
C8479	CAP_402	m39[84B2]
C8480	CAP_402	m39[84B2]
C8481	CAP_402	m39[84B2]
C8482	CAP_402	m39[84B2]
C8483	CAP_402	m39[84B2]
C8484	CAP_402	m39[84B2]
C8485	CAP_402	m39[84B2]
C8486	CAP_402	m39[84B2]
C8500	CAP_603	m39[85D6]
C8501	CAP_603	m39[85D6]
C8502	CAP_603	m39[85D6]
C8506	CAP_402	m39[85C6]
C8507	CAP_402	m39[85C7]
C8508	CAP_402	m39[85C7]
C8509	CAP_402	m39[85C5]
C8520	CAP_603	m39[85C3]
C8521	CAP_402	m39[85C4]
C8522	CAP_402	m39[85C5]
C8523	CAP_402	m39[85B2]
C8530	CAP_1210	m39[85D4]
C8531	CAP_1210	m39[85D4]
C8532	CAP_1210	m39[85D4]
C8540	CAP_805	m39[85C2]
C8541	CAP_805	m39[85C2]
C8542	CAP_P_CASE-D2E-LF	m39[85C2]
C8543	CAP_P_CASE-D2E-LF	m39[85C2]
C8551	CAP_603	m39[85B8]
C8555	CAP_402	m39[85B7]
C8556	CAP_805	m39[85B6]
C8557	CAP_805	m39[85B6]
C8560	CAP_402	m39[85A6]
C8570	CAP_402	m39[85A5]
C8580	CAP_603	m39[85A4]
C8585	CAP_402	m39[85A4]
C8586	CAP_402	m39[85A3]
C8589	CAP_805	m39[85A3]
C8590	CAP_402	m39[85D3]
C8592	CAP_402	m39[85C2]
C8595	CAP_402	m39[85D1]
C8598	CAP_402	m39[85D2]
C8599	CAP_1206	m39[85C4]
C8600	CAP_805	m39[86C7]
C8601	CAP_805	m39[86C7]
C8604	CAP_402	m39[86C7]
C8605	CAP_402	m39[86C6]
C8606	CAP_402	m39[86C6]
C8607	CAP_402	m39[86C6]
C8608	CAP_402	m39[86C5]
C8609	CAP_402	m39[86C5]
C8610	CAP_402	m39[86C5]
C8611	CAP_402	m39[86C7]
C8612	CAP_402	m39[86C6]
C8613	CAP_402	m39[86C6]
C8614	CAP_402	m39[86C6]
C8615	CAP_402	m39[86C5]
C8616	CAP_402	m39[86C5]
C8630	CAP_805	m39[86C6]
C8631	CAP_402	m39[86C6]
C8632	CAP_402	m39[86C5]
C8633	CAP_402	m39[86C5]
C8634	CAP_402	m39[86C5]
C8650	CAP_805	m39[86B7]
C8651	CAP_805	m39[86B7]
C8652	CAP_805	m39[86B7]
C8653	CAP_805	m39[86B6]
C8655	CAP_402	m39[86B6]
C8656	CAP_402	m39[86B6]
C8657	CAP_402	m39[86B6]

C8658	CAP_402	m39[86B5]
C8659	CAP_402	m39[86B5]
C8660	CAP_402	m39[86B5]
C8661	CAP_402	m39[86B6]
C8662	CAP_402	m39[86B6]
C8663	CAP_402	m39[86B6]
C8664	CAP_402	m39[86B5]
C8665	CAP_402	m39[86B5]
C8666	CAP_402	m39[86B5]
C8667	CAP_402	m39[86B6]
C8668	CAP_402	m39[86B6]
C8669	CAP_402	m39[86B6]
C8670	CAP_402	m39[86B5]
C8671	CAP_402	m39[86B5]
C8672	CAP_402	m39[86B5]
C8673	CAP_402	m39[86B6]
C8674	CAP_402	m39[86B6]
C8675	CAP_402	m39[86B6]
C8676	CAP_402	m39[86B5]
C8677	CAP_402	m39[86B5]
C8678	CAP_402	m39[86B5]
C8679	CAP_402	m39[86A6]
C8680	CAP_402	m39[86A6]
C8681	CAP_402	m39[86A6]
C8682	CAP_402	m39[86A5]
C8683	CAP_402	m39[86A5]
C8690	CAP_805	m39[86D5]
C8691	CAP_402	m39[86D5]
C8692	CAP_402	m39[86D5]
C8695	CAP_805	m39[86D2]
C8696	CAP_402	m39[86D3]
C8697	CAP_402	m39[86D3]
C8711	CAP_402	m39[87B7]
C8713	CAP_402	m39[87B7]
C8715	CAP_402	m39[87A7]
C8716	CAP_402	m39[87A6]
C8721	CAP_402	m39[87B4]
C8723	CAP_402	m39[87B4]
C8725	CAP_402	m39[87A4]
C8726	CAP_402	m39[87A3]
C8900	CAP_805	m39[89D7]
C8901	CAP_402	m39[89D7]
C8902	CAP_402	m39[89D7]
C8903	CAP_402	m39[89D7]
C8904	CAP_402	m39[89D6]
C8910	CAP_402	m39[89D7]
C8915	CAP_402	m39[89D6]
C8920	CAP_805	m39[89C8]
C8921	CAP_402	m39[89C8]
C8922	CAP_402	m39[89C7]
C8923	CAP_402	m39[89C7]
C8924	CAP_402	m39[89C7]
C8925	CAP_402	m39[89C7]
C8926	CAP_402	m39[89C6]
C8931	CAP_402	m39[89C7]
C8933	CAP_402	m39[89C6]
C8950	CAP_805	m39[89D4]
C8951	CAP_402	m39[89D4]
C8952	CAP_402	m39[89D4]
C8953	CAP_402	m39[89D3]
C8954	CAP_402	m39[89D3]
C8960	CAP_402	m39[89D3]
C8965	CAP_402	m39[89D3]
C8970	CAP_805	m39[89C5]
C8971	CAP_402	m39[89C4]
C8972	CAP_402	m39[89C4]
C8973	CAP_402	m39[89C4]
C8974	CAP_402	m39[89C4]
C8975	CAP_402	m39[89C3]
C8976	CAP_402	m39[89C3]
C8981	CAP_402	m39[89C3]
C8983	CAP_402	m39[89C3]
C9000	CAP_805	m39[90D7]
C9001	CAP_402	m39[90D7]
C9002	CAP_402	m39[90D7]
C9003	CAP_402	m39[90D7]
C9004	CAP_402	m39[90D6]
C9010	CAP_402	m39[90D7]
C9015	CAP_402	m39[90D6]
C9020	CAP_805	m39[90C8]
C9021	CAP_402	m39[90C8]
C9022	CAP_402	m39[90C7]
C9023	CAP_402	m39[90C7]
C9024	CAP_402	m39[90C7]
C9025	CAP_402	m39[90C7]
C9026	CAP_402	m39[90C6]
C9031	CAP_402	m39[90C7]
C9033	CAP_402	m39[90C6]
C9050	CAP_805	m39[90D4]
C9051	CAP_402	m39[90D4]
C9052	CAP_402	m39[90D4]
C9053	CAP_402	m39[90D3]
C9054	CAP_402	m39[90D3]
C9060	CAP_402	m39[90D3]
C9065	CAP_402	m39[90D3]
C9070	CAP_805	m39[90C5]
C9071	CAP_402	m39[90C4]
C9072	CAP_402	m39[90C4]
C9073	CAP_402	m39[90C4]
C9074	CAP_402	m39[90C4]
C9075	CAP_402	m39[90C3]
C9076	CAP_402	m39[90C3]
C9081	CAP_402	m39[90C3]
C9083	CAP_402	m39[90C3]
C9100	CAP_805	m39[91C5]
C9101	CAP_402	m39[91C5]
C9102	CAP_402	m39[91C5]
C9103	CAP_402	m39[91C5]
C9110	CAP_805	m39[91C5]
C9111	CAP_402	m39[91C5]
C9112	CAP_402	m39[91C5]
C9115	CAP_805	m39[91B5]
C9116	CAP_402	m39[91B5]
C9117	CAP_402	m39[91B5]
C9120	CAP_805	m39[91B5]
C9121	CAP_402	m39[91B5]
C9122	CAP_402	m39[91B5]
C9125	CAP_805	m39[91B5]
C9126	CAP_402	m39[91B5]
C9127	CAP_402	m39[91B5]
C9130	CAP_805	m39[91A6]
C9131	CAP_402	m39[91A6]
C9132	CAP_402	m39[91A5]
C9135	CAP_805	m39[91A6]

C9136	CAP_402	m39[91A6]
C9137	CAP_402	m39[91A5]
C9140	CAP_805	m39[91A6]
C9141	CAP_402	m39[91A6]
C9142	CAP_402	m39[91A5]
C9191	CAP_402	m39[91D2]
C9300	CAP_805	m39[93C6]
C9301	CAP_402	m39[93C6]
C9302	CAP_402	m39[93C5]
C9305	CAP_805	m39[93C6]
C9306	CAP_402	m39[93C6]
C9307	CAP_402	m39[93C5]
C9310	CAP_805	m39[93C6]
C9311	CAP_402	m39[93C6]
C9312	CAP_402	m39[93C5]
C9315	CAP_805	m39[93B8]
C9316	CAP_402	m39[93B8]
C9317	CAP_402	m39[93B7]
C9320	CAP_805	m39[93B6]
C9321	CAP_402	m39[93B6]
C9322	CAP_402	m39[93B5]
C9325	CAP_805	m39[93B8]
C9326	CAP_402	m39[93B8]
C9327	CAP_402	m39[93B7]
C9330	CAP_805	m39[93B6]
C9331	CAP_402	m39[93B6]
C9332	CAP_402	m39[93B5]
C9340	CAP_805	m39[93A6]
C9341	CAP_402	m39[93A6]
C9342	CAP_402	m39[93A5]
C9345	CAP_805	m39[93A6]
C9346	CAP_402	m39[93A5]
C9347	CAP_402	m39[93A5]
C9400	CAP_603-1	m39[94C7]
C9401	CAP_402	m39[94C6]
C9410	CAP_402	m39[94C6]
C9420	CAP_1210	m39[94C5]
C9470	CAP_402	m39[94B2]
C9700	CAP_402	m39[97C8]
C9710	CAP_603	m39[97C3]
C9711	CAP_402	m39[97D3]
C9713	CAP_402	m39[97C2]
C9714	CAP_402	m39[97C2]
C9740	CAP_402	m39[97A7]
C9741	CAP_402	m39[97A6]
C9742	CAP_402	m39[97A6]
D2500	DIODE_SCHOT_SOT23	m39[25C8]
D2501	DIODE_SCHOT_SOT23	m39[25D8]
D2600	DIODE_SCHOT_SOT23	m39[26D8]
D2601	DIODE_SCHOT_SOT23	m39[26C8]
D4600	DIODE_SMC	m39[46D5]
D4690	ZENER_SOT23	m39[46A6]
D4700	DIODE_SCHOT_3P_A_SC-75	m39[47C5]
D4701	DIODE_SCHOT_3P_A_SC-75	m39[47B5]
D4702	DIODE_SCHOT_3P_A_SC-75	m39[47A5]
D4705	DIODE_SCHOT_3P_A_SC-75	m39[47C6]
D4706	DIODE_SCHOT_3P_A_SC-75	m39[47B6]
D4707	DIODE_SCHOT_3P_A_SC-75	m39[47A6]
D4710	DIODE_SCHOT_3P_A_SC-75	m39[47C6]
D4900	DIODE_SCHOT_3P_A_SC-75	m39[49B4]
D6500	DIODE_SOT23	m39[65C4]
D6501	DIODE_SOT23	m39[65B4]
D6502	DIODE_SCHOT_SMB	m39[65C4]
D6503	DIODE_SCHOT_SMB	m39[65B4]
D6600	DIODE_SOT23	m39[66C4]
D6601	DIODE_SCHOT_SMB	m39[66C3]
D7500	DIODE_SCHOT_SMB	m39[75C3]
D7501	DIODE_SCHOT_SMB	m39[75B2]
D7599	DIODE_SOT23	m39[76D6]
D8520	DIODE_SCHOT_SMB	m39[85C3]
D9700	ZENER_CASE425	m39[97C1]
DP4610	DIODE_DUAL_6P_SOT-36	m39[46D4 46D3]
DP4611	DIODE_DUAL_6P_SOT-36	m39[46C4 46C3]
DP4620	DIODE_DUAL_6P_SOT-36	m39[46B4 46B3]
DP4621	DIODE_DUAL_6P_SOT-36	m39[46A4 46A3]
DZ7300	SUPPR_TRANSIENT_4P1_0405	m39[73C6]
DZ7301	SUPPR_TRANSIENT_4P1_0405	m39[73A5]
DZ7302	SUPPR_TRANSIENT_4P1_0405	m39[73A4]
DZ7303	SUPPR_TRANSIENT_4P1_0405	m39[73C5]
DZ7304	SUPPR_TRANSIENT_4P1_0405	m39[73C4]
F4600	FUSE_SM-LF	m39[46D2]
F4601	FUSE_SM-LF	m39[46D2]
F4602	FUSE_MINISMD-LF	m39[46D3]
F4701	FUSE_MINISMD-LF	m39[47D3]
F9710	FUSE_SM-LF	m39[97D5]
FL4610	FILTER_4P_2012	m39[46C3]
FL4620	FILTER_4P_2012	m39[46B3]
FL9740	FILTER_LC_SM-220MHZ-LF	m39[97B7]
FL9741	FILTER_LC_SM-220MHZ-LF	m39[97A7]
FL9742	FILTER_LC_SM-220MHZ-LF	m39[97A7]
FLE011	FILTER_4P_2012	m39[46C3]
FLE021	FILTER_4P_2012	m39[46B3]
GV3801	HOLE_VIA	m39[38A8]
GV3802	HOLE_VIA	m39[38A7]
GV3803	HOLE_VIA	m39[38A8]
GV3804	HOLE_VIA	m39[38A7]
GV3805	HOLE_VIA	m39[38A8]
GV3806	HOLE_VIA	m39[38A7]
GV3807	HOLE_VIA	m39[38A8]
GV3808	HOLE_VIA	m39[38A7]
J2	CON_2RTSM_125_SM-2MT-BLK-LF	m39[61B7]
J3	CON_2RTSM_125_SM-2MT-BLK-LF	m39[61B6]

www.teknisi-indonesia.com

J600	CON_M14RT_D_THA_M-RT-TH1	m39[6D7]
J0700	CPU_YONAH_SKT_BGA	m39[7C3 7D7]
J0700	CPU_YONAH_SKT_BGA	m39[8D4 8D8]
J1000	CON_2RTSM_125_SM-2MT-BLK-LF	m39[10B7]
J1101	CON_F28RT_S2MT_SM_F-RT-SM	m39[11C2]
J2600	BATTERY_2P_TH	m39[26C8]
J2800	CON_F200RT_DDR2DIMM_5MT_SM_F-RT-SM1	m39[28D5]
J2900	CON_F200RT_DDR2DIMM_5MT_SM_F-RT-SM1	m39[29D5]
J2901	CON_F4ST_S2MT_SM_F-T-SM	m39[59C7]
J2903	CON_M2ST_S2MT_SM_M-T-SM	m39[59C8]
J4700	CON_F10ST_D_SMA_F-ST-SM	m39[47A2]
J4950	CON_F4ST_S2MT_SM_F-T-SM	m39[49C4]
J5300	CON_F52RT_D2MT_SM_F-RT-SM	m39[53C5]
J6000	CON_F30STSM_5047_SM1	m39[60B5]
J6500	CON_M4RT_S2MT_SM_M-T-SM	m39[65D3]
J6501	CON_M5RT_S2MT_SMA_M-RT-SM	m39[65B2]
J6600	CON_F4ST_S2MT_SM_F-T-SM	m39[66C2]
J6601	CON_M4RT_S2MT_SM_M-T-SM	m39[66B5]
J6602	CON_M4RT_S2MT_SM_M-T-SM	m39[66B3]
J7300	CON_F4ST_S4MT_TH1_F-ST-TH	m39[73D8]
J7301	CON_M7RT_S2MT_SM_M-T-SM	m39[73D1]
J7303	CON_F9ANG_S4MT_TH1_F-ANG-TH	m39[73B3]
J9402	CON_F30ST_D_SM_F-ST-SM	m39[94B6]
J9710	CON_DVI_F32ST_Q2MT_SM_F-ST-SM	m39[97D5]
JC900	CON_M7ST_SATA_SM_M-T-SM	m39[38B8]
JC901	CON_M50SM_5MM_M-ST-M2-LF	m39[38C2]
JD600	CON_RJ45_10ANG_S3MT_TH1_F-ANG-TH	m39[43C6]
JE000	CON_F6ST_S4MT_TH1_F-ST-TH	m39[46C2]
JE001	CON_F6ST_S4MT_TH1_F-ST-TH	m39[46B2]
JE310	CON_F4ST_USB_S3MT_TH_F-ST-TH	m39[47D4]
JE320	CON_F4ST_USB_S3MT_TH_F-ST-TH	m39[47B4]
JE330	CON_F4ST_USB_S3MT_TH_F-ST-TH	m39[47A4]
JE350	CON_M14RT_S2MT_SM_M-RT-SM	m39[47C1]
L1934	IND_0603	m39[19C7]
L1936	IND_0603	m39[19C7]
L1970	IND_1210	m39[19A5]
L1975	IND_0805	m39[19A5]
L2500	IND_SM-3	m39[25B8]
L2507	IND_1206	m39[25A7]
L3301	IND_0402	m39[33D7]
L3302	IND_0402	m39[33D3]
L4200	IND_SM	m39[42D7]
L4201	IND_SM	m39[42B7]
L4300	IND_SM	m39[43D7]
L4409	IND_0402	m39[44D6]
L4610	IND_1206-LF	m39[46D2]
L4620	IND_1206-LF	m39[46B2]
L4690	IND_SM-1	m39[46A6]
L4710	IND_SM	m39[47D6]
L4712	FILTER_4P_2012	m39[47C6]
L4720	IND_SM	m39[47C6]
L4722	FILTER_4P_2012	m39[47B6]
L4730	IND_SM	m39[47B6]
L4732	FILTER_4P_2012	m39[47A6]
L4740	IND_SM	m39[47D2]
L4742	FILTER_4P_2012	m39[47C2]
L4752	FILTER_4P_2012	m39[47B2]
L5300	FILTER_4P_2012	m39[53B3]
L6800	IND_0402	m39[68A5]
L6801	IND_0402	m39[68D6]
L7200	IND_SM-1	m39[72D6]
L7201	IND_0603	m39[72C2]
L7202	IND_0603	m39[72C2]
L7203	IND_0603	m39[72C3]
L7204	IND_0603	m39[72C3]
L7205	IND_0603	m39[72D6]
L7206	IND_0603	m39[72C6]
L7207	IND_0603	m39[72C6]
L7208	IND_0603	m39[72C6]
L7300	IND_SM	m39[73D7]
L7301	IND_SM	m39[73D7]
L7302	IND_SM	m39[73D7]
L7303	IND_SM	m39[73D7]
L7304	IND_SM	m39[73D5]
L7305	IND_SM	m39[73D5]
L7306	IND_SM	m39[73D5]
L7307	IND_SM	m39[73D5]
L7309	IND_SM	m39[73C6]
L7310	IND_SM	m39[73C6]
L7312	IND_SM	m39[73C4]
L7313	IND_SM	m39[73C4]
L7314	IND_SM	m39[73B7]
L7315	IND_SM	m39[73B7]
L7316	IND_SM	m39[73B7]
L7317	IND_SM	m39[73A7]
L7318	IND_SM	m39[73B7]
L7319	IND_SM	m39[73B7]
L7320	IND_SM	m39[73A7]
L7322	IND_SM	m39[73B5]
L7323	IND_SM	m39[73B5]
L7324	IND_SM	m39[73B5]
L7325	IND_SM	m39[73A5]
L7326	IND_SM	m39[73B5]
L7327	IND_SM	m39[73B5]
L7328	IND_SM	m39[73A5]

L7500	IND_SM	m39[75D1]
L7501	IND_SM	m39[75B2]
L7502	IND_TH-VERT-LF	m39[76D8]
L7700	IND_SM1-LF	m39[77C4]
L7750	IND_SM-LF	m39[77B4]
L7800	IND_3P_SM	m39[78B3]
L7900	IND_3P_SM	m39[79C3]
L8000	IND_IHLP	m39[80C3]
L8100	IND_IHLP	m39[81C3]
L8400	IND_0402	m39[84B7]
L8520	IND_IHLP	m39[85C3]
L8585	IND_4P_2COIL_SDQ1215-SM	m39[85A3]
L8715	IND_0402	m39[87A7]
L8725	IND_0402	m39[87A4]
L8910	IND_0402	m39[89D7]
L8915	IND_0402	m39[89D7]
L8960	IND_0402	m39[89D4]
L8965	IND_0402	m39[89D4]
L9010	IND_0402	m39[90D7]
L9015	IND_0402	m39[90D7]
L9060	IND_0402	m39[90D4]
L9065	IND_0402	m39[90D4]
L9120	IND_0402	m39[91B6]
L9125	IND_0402	m39[91B6]
L9130	IND_0402	m39[91B7]
L9135	IND_0402	m39[91A7]
L9140	IND_0402	m39[91A7]
L9300	IND_0402	m39[93C7]
L9305	IND_0402	m39[93C7]
L9310	IND_0402	m39[93C7]
L9315	IND_0402	m39[93C7]
L9320	IND_0402	m39[93B7]
L9325	IND_0402	m39[93B7]
L9330	IND_0402	m39[93B7]
L9345	IND_0402	m39[93B7]
L9400	IND_SM	m39[94C6]
L9700	FILTER_4P_SM	m39[97D7]
L9701	FILTER_4P_SM	m39[97D7]
L9702	FILTER_4P_SM	m39[97C7]
L9703	FILTER_4P_SM	m39[97C7]
L9710	IND_SM-1	m39[97D5]
LED600	LED_2.0X1.25MM-SM	m39[6A7]
LED601	LED_2.0X1.25MM-SM	m39[6A8]
LED602	LED_2.0X1.25MM-SM	m39[6A7]
LED2901	LED_3X2MM-SM	m39[59D6]
LED3800	LED_2.0X1.25MM-SM	m39[38B3]
LED4300	LED_2.0X1.25MM-SM	m39[43D2]
LED4301	LED_2.0X1.25MM-SM	m39[43D2]
LED4302	LED_2.0X1.25MM-SM	m39[43D1]
LED4303	LED_2.0X1.25MM-SM	m39[43D1]
LED7900	LED_2.0X1.25MM-SM	m39[79A4]
LED8000	LED_2.0X1.25MM-SM	m39[80A4]
LED8100	LED_2.0X1.25MM-SM	m39[81A4]
PP5E1	PROBEPOINT_SM	m39[5B8]
PP5E2	PROBEPOINT_SM	m39[5B8]
PP6A0	PROBEPOINT_SM	m39[5A6]
PP6A1	PROBEPOINT_SM	m39[5A6]
PP6A2	PROBEPOINT_SM	m39[5A6]
PP6A3	PROBEPOINT_SM	m39[5A6]
PP6A4	PROBEPOINT_SM	m39[5A6]
PP6A5	PROBEPOINT_SM	m39[5A6]
PP6A6	PROBEPOINT_SM	m39[5A6]
PP6A7	PROBEPOINT_SM	m39[5A6]
PP6A8	PROBEPOINT_SM	m39[5A6]
PP6A9	PROBEPOINT_SM	m39[5A6]
PP6B0	PROBEPOINT_SM	m39[5A6]
PP6B1	PROBEPOINT_SM	m39[5A6]
PP6B2	PROBEPOINT_SM	m39[5A6]
PP6B3	PROBEPOINT_SM	m39[5A6]
PP6B4	PROBEPOINT_SM	m39[5A6]
PP6B5	PROBEPOINT_SM	m39[5A6]
PP6B6	PROBEPOINT_SM	m39[5A6]
PP6B7	PROBEPOINT_SM	m39[5A6]
PP6B8	PROBEPOINT_SM	m39[5A6]
PP6B9	PROBEPOINT_SM	m39[5A6]
PP6C0	PROBEPOINT_SM	m39[5A6]
PP6C1	PROBEPOINT_SM	m39[5A6]
PP6C2	PROBEPOINT_SM	m39[5A6]
PP6C3	PROBEPOINT_SM	m39[5A6]
PP6C4	PROBEPOINT_SM	m39[5C8]
PP6C5	PROBEPOINT_SM	m39[5C8]
PP6C6	PROBEPOINT_SM	m39[5C8]
PP6C7	PROBEPOINT_SM	m39[5C8]
PP6C8	PROBEPOINT_SM	m39[5C8]
PP6D0	PROBEPOINT_SM	m39[5C8]
PP6D1	PROBEPOINT_SM	m39[5C8]
PP6D2	PROBEPOINT_SM	m39[5B8]
PP6D3	PROBEPOINT_SM	m39[5B8]
PP6D4	PROBEPOINT_SM	m39[5B8]
PP6D5	PROBEPOINT_SM	m39[5B8]
PP6D6	PROBEPOINT_SM	m39[5B8]
PP6D7	PROBEPOINT_SM	m39[5B8]
PP6D8	PROBEPOINT_SM	m39[5B8]
PP6D9	PROBEPOINT_SM	m39[5B8]
PP6E0	PROBEPOINT_SM	m39[5B8]
PP6E1	PROBEPOINT_SM	m39[5B6]
PP600	PROBEPOINT_SM	m39[5D8]
PP601	PROBEPOINT_SM	m39[5D8]
PP602	PROBEPOINT_SM	m39[5D8]
PP603	PROBEPOINT_SM	m39[5D8]
PP604	PROBEPOINT_SM	m39[5D8]
PP605	PROBEPOINT_SM	m39[5D8]
PP606	PROBEPOINT_SM	m39[5D8]
PP607	PROBEPOINT_SM	m39[5D8]
PP608	PROBEPOINT_SM	m39[5D8]
PP609	PROBEPOINT_SM	m39[5D8]
PP610	PROBEPOINT_SM	m39[5D8]
PP611	PROBEPOINT_SM	m39[5D8]
PP612	PROBEPOINT_SM	m39[5D8]
PP613	PROBEPOINT_SM	m39[5D8]
PP614	PROBEPOINT_SM	m39[5D8]
PP615	PROBEPOINT_SM	m39[5D8]
PP616	PROBEPOINT_SM	m39[5D8]
PP617	PROBEPOINT_SM	m39[5D8]
PP618	PROBEPOINT_SM	m39[5D8]
PP619	PROBEPOINT_SM	m39[5D8]
PP620	PROBEPOINT_SM	m39[5D8]
PP621	PROBEPOINT_SM	m39[5C8]
PP622	PROBEPOINT_SM	m39[5C8]
PP623	PROBEPOINT_SM	m39[5C8]
PP624	PROBEPOINT_SM	m39[5C8]
PP625	PROBEPOINT_SM	m39[5C8]
PP626	PROBEPOINT_SM	m39[5C8]

PP627	PROBEPOINT_SM	m39[5C8]
PP628	PROBEPOINT_SM	m39[5C8]
PP629	PROBEPOINT_SM	m39[5C8]
PP630	PROBEPOINT_SM	m39[5C8]
PP631	PROBEPOINT_SM	m39[5D6]
PP632	PROBEPOINT_SM	m39[5D6]
PP633	PROBEPOINT_SM	m39[5D6]
PP634	PROBEPOINT_SM	m39[5D6]
PP635	PROBEPOINT_SM	m39[5D6]
PP636	PROBEPOINT_SM	m39[5D6]
PP637	PROBEPOINT_SM	m39[5D6]
PP638	PROBEPOINT_SM	m39[5D6]
PP639	PROBEPOINT_SM	m39[5D6]
PP640	PROBEPOINT_SM	m39[5D6]
PP641	PROBEPOINT_SM	m39[5D6]
PP642	PROBEPOINT_SM	m39[5D6]
PP643	PROBEPOINT_SM	m39[5D6]
PP644	PROBEPOINT_SM	m39[5D6]
PP645	PROBEPOINT_SM	m39[5D6]
PP646	PROBEPOINT_SM	m39[5D6]
PP647	PROBEPOINT_SM	m39[5D6]
PP648	PROBEPOINT_SM	m39[5D6]
PP649	PROBEPOINT_SM	m39[5D6]
PP650	PROBEPOINT_SM	m39[5D6]
PP651	PROBEPOINT_SM	m39[5D6]
PP652	PROBEPOINT_SM	m39[5C6]
PP653	PROBEPOINT_SM	m39[5C6]
PP654	PROBEPOINT_SM	m39[5C6]
PP655	PROBEPOINT_SM	m39[5C6]
PP656	PROBEPOINT_SM	m39[5C6]
PP657	PROBEPOINT_SM	m39[5C6]
PP658	PROBEPOINT_SM	m39[5C6]
PP659	PROBEPOINT_SM	m39[5C6]
PP660	PROBEPOINT_SM	m39[5C6]
PP661	PROBEPOINT_SM	m39[5C6]
PP662	PROBEPOINT_SM	m39[5C6]
PP663	PROBEPOINT_SM	m39[5C6]
PP664	PROBEPOINT_SM	m39[5C6]
PP665	PROBEPOINT_SM	m39[5C6]
PP666	PROBEPOINT_SM	m39[5C6]
PP667	PROBEPOINT_SM	m39[5C6]
PP668	PROBEPOINT_SM	m39[5C6]
PP673	PROBEPOINT_SM	m39[5C6]
PP674	PROBEPOINT_SM	m39[5C6]
PP675	PROBEPOINT_SM	m39[5B6]
PP676	PROBEPOINT_SM	m39[5B6]
PP677	PROBEPOINT_SM	m39[5B6]
PP678	PROBEPOINT_SM	m39[5B6]
PP679	PROBEPOINT_SM	m39[5B6]
PP680	PROBEPOINT_SM	m39[5B6]
PP681	PROBEPOINT_SM	m39[5B6]
PP682	PROBEPOINT_SM	m39[5B6]
PP683	PROBEPOINT_SM	m39[5B6]
PP684	PROBEPOINT_SM	m39[5B6]
PP685	PROBEPOINT_SM	m39[5B6]
PP686	PROBEPOINT_SM	m39[5B6]
PP687	PROBEPOINT_SM	m39[5B6]
PP688	PROBEPOINT_SM	m39[5B6]
PP689	PROBEPOINT_SM	m39[5B6]
PP690	PROBEPOINT_SM	m39[5B6]
PP691	PROBEPOINT_SM	m39[5B6]
PP692	PROBEPOINT_SM	m39[5B6]
PP693	PROBEPOINT_SM	m39[5B6]
PP694	PROBEPOINT_SM	m39[5B6]
PP695	PROBEPOINT_SM	m39[5B6]
PP696	PROBEPOINT_SM	m39[5B6]
PP697	PROBEPOINT_SM	m39[5B6]
PP698	PROBEPOINT_SM	m39[5B6]
PP699	PROBEPOINT_SM	m39[5B6]
PP700	TP_SM-TP50-TOP	m39[5D3]
PP701	TP_SM-TP50-TOP	m39[5D3]
PP702	TP_SM-TP50-TOP	m39[5D3]
PP1200	TP_SM-TP50-TOP	m39[5D3]
PP1201	TP_SM-TP50-TOP	m39[5D3]
PP1202	TP_SM-TP50-TOP	m39[5D3]
PP2800	TP_SM-TP50-TOP	m39[5C3]
PP2801	TP_SM-TP50-TOP	m39[5C3]
PP2802	TP_SM-TP50-TOP	m39[5C3]
PP4100	PROBEPOINT_SM	m39[5D4]
PP4101	PROBEPOINT_SM	m39[5D4]
PP8400	PROBEPOINT_SM	m39[5C5]
PP8401	PROBEPOINT_SM	m39[5C5]
PP8700	PROBEPOINT_SM	m39[5D5]
PP8701	PROBEPOINT_SM	m39[5D5]
PP8702	PROBEPOINT_SM	m39[5D5]
PP8703	PROBEPOINT_SM	m39[5D5]
PP8704	PROBEPOINT_SM	m39[5D5]
PP8705	PROBEPOINT_SM	m39[5D5]
PP8706	PROBEPOINT_SM	m39[5D5]
PP8707	PROBEPOINT_SM	m39[5D5]
PP8708	PROBEPOINT_SM	m39[5D5]
PP8709	PROBEPOINT_SM	m39[5D5]
PP8710	PROBEPOINT_SM	m39[5D5]
PP8711	PROBEPOINT_SM	m39[5D5]
PP8712	PROBEPOINT_SM	m39[5D5]
PP8713	PROBEPOINT_SM	m39[5D5]
PP8714	PROBEPOINT_SM	m39[5D5]
PP8715	PROBEPOINT_SM	m39[5D5]
PP8716	PROBEPOINT_SM	m39[5D5]
PP8720	PROBEPOINT_SM	m39[5D5]
PP8721	PROBEPOINT_SM	m39[5D5]
PP8722	PROBEPOINT_SM	m39[5D5]
PP8723	PROBEPOINT_SM	m39[5C5]
PP8724	PROBEPOINT_SM	m39[5C5]
PP8725	PROBEPOINT_SM	m39[5C5]
PP8726	PROBEPOINT_SM	m39[5C5]
PP8727	PROBEPOINT_SM	m39[5C5]
PP8728	PROBEPOINT_SM	m39[5C5]
PP8729	PROBEPOINT_SM	m39[5C5]
PP8730	PROBEPOINT_SM	m39[5C5]
PP8731	PROBEPOINT_SM	m39[5C5]
PP8732	PROBEPOINT_SM	m39[5C5]
PP8733	PROBEPOINT_SM	m39[5C5]
PP8734	PROBEPOINT_SM	m39[5C5]
PP8735	PROBEPOINT_SM	m39[5C5]
PP8736	PROBEPOINT_SM	m39[5C5]
PP8900	PROBEPOINT_SM	m39[5B5]
PP8901	PROBEPOINT_SM	m39[5B5]
PP8902	PROBEPOINT_SM	m39[5B5]
PP8903	PROBEPOINT_SM	m39[5B5]
PP8904	PROBEPOINT_SM	m39[5B5]
PP8905	PROBEPOINT_SM	m39[5B5]
PP8906	PROBEPOINT_SM	m39[5B5]
PP8907	PROBEPOINT_SM	m39[5B5]

PP8908	PROBEPOINT_SM	m39[5B5]
PP8909	PROBEPOINT_SM	m39[5B5]
PP8910	PROBEPOINT_SM	m39[5B5]
PP8911	PROBEPOINT_SM	m39[5B5]
PP8912	PROBEPOINT_SM	m39[5B5]
PP8913	PROBEPOINT_SM	m39[5B5]
PP8914	PROBEPOINT_SM	m39[5A5]
PP8915	PROBEPOINT_SM	m39[5A5]
PP8916	PROBEPOINT_SM	m39[5A5]
PP8920	PROBEPOINT_SM	m39[5A5]
PP8921	PROBEPOINT_SM	m39[5A5]
PP8922	PROBEPOINT_SM	m39[5A5]
PP8923	PROBEPOINT_SM	m39[5A5]
PP8924	PROBEPOINT_SM	m39[5A5]
PP8925	PROBEPOINT_SM	m39[5A5]
PP8926	PROBEPOINT_SM	m39[5A5]
PP8927	PROBEPOINT_SM	m39[5A5]
PP8928	PROBEPOINT_SM	m39[5A5]
PP8929	PROBEPOINT_SM	m39[5A5]
PP8930	PROBEPOINT_SM	m39[5A5]
PP8931	PROBEPOINT_SM	m39[5A5]
PP8932	PROBEPOINT_SM	m39[5A5]
PP8933	PROBEPOINT_SM	m39[5A5]
PP8934	PROBEPOINT_SM	m39[5A5]
PP8935	PROBEPOINT_SM	m39[5A5]
PP8936	PROBEPOINT_SM	m39[5A5]
PP9000	PROBEPOINT_SM	m39[5B4]
PP9001	PROBEPOINT_SM	m39[5B4]
PP9002	PROBEPOINT_SM	m39[5B4]
PP9003	PROBEPOINT_SM	m39[5B4]
PP9004	PROBEPOINT_SM	m39[5B4]
PP9005	PROBEPOINT_SM	m39[5B4]
PP9006	PROBEPOINT_SM	m39[5B4]
PP9007	PROBEPOINT_SM	m39[5B4]
PP9008	PROBEPOINT_SM	m39[5B4]
PP9009	PROBEPOINT_SM	m39[5B4]
PP9010	PROBEPOINT_SM	m39[5B4]
PP9011	PROBEPOINT_SM	m39[5B4]
PP9012	PROBEPOINT_SM	m39[5B4]
PP9013	PROBEPOINT_SM	m39[5B4]
PP9014	PROBEPOINT_SM	m39[5A4]
PP9015	PROBEPOINT_SM	m39[5A4]
PP9016	PROBEPOINT_SM	m39[5A4]
PP9020	PROBEPOINT_SM	m39[5A4]
PP9021	PROBEPOINT_SM	m39[5A4]
PP9022	PROBEPOINT_SM	m39[5A4]
PP9023	PROBEPOINT_SM	m39[5A4]
PP9024	PROBEPOINT_SM	m39[5A4]
PP9025	PROBEPOINT_SM	m39[5A4]
PP9026	PROBEPOINT_SM	m39[5A4]
PP9027	PROBEPOINT_SM	m39[5A4]
PP9028	PROBEPOINT_SM	m39[5A4]
PP9029	PROBEPOINT_SM	m39[5A4]
PP9030	PROBEPOINT_SM	m39[5A4]
PP9031	PROBEPOINT_SM	m39[5A4]
PP9032	PROBEPOINT_SM	m39[5A4]
PP9033	PROBEPOINT_SM	m39[5A4]
PP9034	PROBEPOINT_SM	m39[5A4]
PP9035	PROBEPOINT_SM	m39[5A4]
PP9036	PROBEPOINT_SM	m39[5A4]
Q4200	TRA_2N7002_SOT23-LF	m39[42D2]
Q4201	TRA_PBSS5540Z_SOT223	m39[42C6]
Q4400	TRA_SINGLE_MOSFET_NC HN_SOT23	m39[44A7]
Q5900	TRA_FDV301N_SOT23-LF	m39[59D7]
Q5901	TRA_2N7002DW_SOT-363	m39[59C7 59C7]
Q5902	TRA_2N7002DW_SOT-363	m39[59B1 59B2]
Q5903	TRA_DUAL_MMDT3904_SOT-363-LF	m39[59A2 59A1]
Q5910	TRA_SINGLE_MOSFET_PC HN_SOT-23	m39[59A4]
Q5911	TRA_2N7002_SOT23-LF	m39[59A4]
Q6500	TRA_NTHS5443T1_1206A-03-LF	m39[65D4]
Q6502	TRA_2N7002DW_SOT-363	m39[65D8 65D6]
Q6503	TRA_NTHS5443T1_1206A-03-LF	m39[65B4]
Q6505	TRA_2N7002DW_SOT-363	m39[65C8 65B6]
Q6600	TRA_NTHS5443T1_1206A-03-LF	m39[66D4]
Q6602	TRA_2N7002DW_SOT-363	m39[66D8 66C5]
Q7200	TRA_2N7002DW_SOT-363	m39[72B6 72B7]
Q7400	TRA_2N7002DW_SOT-363	m39[74B3 74B3]
Q7401	TRA_2N7002_SOT23-LF	m39[74C3]
Q7402	TRA_2N7002DW_SOT-363	m39[74B2 74B2]
Q7500	TRA_HAT2168H_LFPAK	m39[75D3]
Q7501	TRA_HAT2165H_LFPAK	m39[75D3]
Q7502	TRA_HAT2168H_LFPAK	m39[75C3]
Q7503	TRA_HAT2165H_LFPAK	m39[75B3]
Q7504	TRA_HAT2165H_LFPAK	m39[75D3]
Q7505	TRA_HAT2165H_LFPAK	m39[75B3]
Q7570	TRA_HAT2168H_LFPAK	m39[75D2]
Q7572	TRA_HAT2168H_LFPAK	m39[75C3]
Q7639	TRA_2N7002_SOT23-LF	m39[76A7]
Q7640	TRA_SINGLE_MOSFET_PC HN_SOT-23	m39[76A6]
Q7641	TRA_FDC796N_SUPERSOT-6	m39[76A5]
Q7642	TRA_FDC796N_SUPERSOT-6	m39[76A4]
Q7701	TRA_SI3446DV_TSOP-LF	m39[77A3]
Q7703	TRA_2N7002DW_SOT-363	m39[77C7 77D7]
Q7799	TRA_2N7002_SOT23-LF	m39[77A6]
Q7800	TRA_NTD60N02R_CASE369-LF	m39[78C4]
Q7801	TRA_NTD60N02R_CASE369-LF	m39[78B4]
Q7802	TRA_2N7002_SOT23-LF	m39[78B7]
Q7900	TRA_NTD60N02R_CASE369-LF	m39[79D4]
Q7901	TRA_NTD60N02R_CASE369-LF	m39[79C4]
Q7902	TRA_2N7002_SOT23-LF	m39[79C7]
Q8000	TRA_NTD60N02R_CASE369-LF	m39[80D4]
Q8001	TRA_NTD60N02R_CASE369-LF	m39[80C4]
Q8003	TRA_2N7002_SOT23-LF	m39[80C7]
Q8102	TRA_NTD60N02R_CASE369-LF	m39[81D4]
Q8103	TRA_NTD60N02R_CASE369-LF	m39[81C4]
Q8104	TRA_2N7002_SOT23-LF	m39[81C7]
Q8300	TRA_IRF7413_SO-8	m39[83C4]

www.teknisi-indonesia.com

Q8301	TRA_IRF7413_SO-8	m39[83B4]
Q8302	TRA_2N7002DW_SOT-363	m39[83B5]
Q8303	TRA_2N7002DW_SOT-363	m39[83C5]
Q8520	TRA_HAT2168H_LFPAK	m39[85D4]
Q8521	TRA_HAT2165H_LFPAK	m39[85C4]
Q8522	TRA_HAT2165H_LFPAK	m39[85C5]
Q8523	TRA_2N7002DW_SOT-363	m39[85B3 85B2]
Q8554	TRA_2N7002_SOT23-LF	m39[85A8]
Q8570	TRA_2N7002_SOT23-LF	m39[85A5]
Q8575	TRA_FDC796N_SUPERSOT -6	m39[85B6]
Q8576	TRA_FDC796N_SUPERSOT -6	m39[85A2]
Q9400	TRA_SI3443DV_TSOP-LF	m39[94C7]
Q9401	TRA_2N7002_SOT23-LF	m39[94C7]
Q9711	TRA_2N7002DW_SOT-363	m39[97D2 97C2]
R75A0	RES_402	m39[75C7]
R85A0	RES_402	m39[85D1]
R600	RES_603	m39[6A7]
R601	RES_402	m39[6D8]
R602	RES_603	m39[6A8]
R603	RES_402	m39[6B1]
R605	RES_603	m39[6A7]
R611	RES_402	m39[6B7]
R612	RES_402	m39[6B7]
R614	RES_402	m39[6B7]
R615	RES_402	m39[6B7]
R616	RES_402	m39[6A7]
R617	RES_402	m39[6A7]
R618	RES_402	m39[6C7]
R619	RES_402	m39[6B7]
R0702	RES_402	m39[7D6]
R0703	RES_402	m39[7C6]
R0704	RES_402	m39[7C5]
R0705	RES_402	m39[7B4]
R0706	RES_402	m39[7B5]
R0707	RES_402	m39[7A4]
R0712	RES_402	m39[7A3]
R0716	RES_402	m39[7B1]
R0717	RES_402	m39[7B1]
R0718	RES_402	m39[7B1]
R0719	RES_402	m39[7B1]
R0720	RES_402	m39[7B7]
R0721	RES_402	m39[7B7]
R0722	RES_402	m39[7A7]
R0730	RES_402	m39[7A4]
R0802	RES_402	m39[8B7]
R0803	RES_402	m39[8A7]
R1000	RES_402	m39[10D3]
R1001	RES_402	m39[10D3]
R1002	RES_402	m39[10C6]
R1005	RES_402	m39[10D3]
R1017	RES_402	m39[10C6]
R1018	RES_402	m39[10B6]
R1019	RES_402	m39[10B6]
R1100	RES_402	m39[11B5]
R1101	RES_402	m39[11C5]
R1102	RES_402	m39[11B4]
R1103	RES_402	m39[11C5]
R1104	RES_402	m39[11B5]
R1106	RES_402	m39[11A3]
R1210	RES_402	m39[12C3]
R1211	RES_402	m39[12C3]
R1220	RES_402	m39[12B7]
R1221	RES_402	m39[12B7]
R1225	RES_402	m39[12B7]
R1226	RES_402	m39[12B7]
R1230	RES_402	m39[12A7]
R1231	RES_402	m39[12A7]
R1235	RES_402	m39[12A7]
R1236	RES_402	m39[12A7]
R1310	RES_402	m39[13D3]
R1410	RES_402	m39[14C3]
R1411	RES_402	m39[14C3]
R1420	RES_402	m39[14B6]
R1430	RES_402	m39[14B6]
R1440	RES_402	m39[14D6]
R1441	RES_402	m39[14D6]
R1975	RES_402	m39[19A4]
R1980	RES_402	m39[19B7]
R1981	RES_402	m39[19B7]
R1982	RES_402	m39[19B8]
R1983	RES_402	m39[19B8]
R2058	RES_402	m39[20B4]
R2059	RES_402	m39[20B4]
R2060	RES_402	m39[20A4]
R2075	RES_402	m39[20C7]
R2077	RES_402	m39[20B7]
R2079	RES_402	m39[20B7]
R2085	RES_402	m39[20C4]
R2100	RES_402	m39[21C3]
R2101	RES_402	m39[21C4]
R2105	RES_402	m39[21D6]
R2107	RES_402	m39[21C2]
R2108	RES_402	m39[21C2]
R2110	RES_402	m39[21C2]
R2194	RES_402	m39[21D4]
R2195	RES_402	m39[21C6]
R2196	RES_402	m39[21C6]
R2197	RES_402	m39[21C6]
R2198	RES_402	m39[21C6]
R2199	RES_402	m39[21C3]
R2200	RES_402	m39[22D7]
R2203	RES_402	m39[22C2]
R2204	RES_402	m39[22C2]
R2205	RES_402	m39[22C6]
R2206	RES_402	m39[22C5]
R2207	RES_402	m39[22C5]
R2211	RES_402	m39[22B3]
R2222	RES_402	m39[22D6]
R2223	RES_402	m39[22D6]
R2225	RES_402	m39[22D7]
R2226	RES_402	m39[22D5]
R2250	RES_402	m39[22D7]
R2251	RES_402	m39[22D6]
R2252	RES_402	m39[47B8]
R2253	RES_402	m39[47B8]
R2254	RES_402	m39[47B8]
R2255	RES_402	m39[22D7]
R2298	RES_402	m39[22B5]
R2299	RES_402	m39[22B5]
R2302	RES_402	m39[23D3]
R2303	RES_402	m39[23D3]
R2305	RES_402	m39[23D3]

R2306	RES_402	m39[23B7]
R2307	RES_402	m39[23A7]
R2308	RES_402	m39[23B7]
R2309	RES_402	m39[23A7]
R2310	RES_402	m39[23A7]
R2311	RES_402	m39[23A7]
R2313	RES_402	m39[23A7]
R2314	RES_402	m39[23A7]
R2316	RES_402	m39[23D7]
R2317	RES_402	m39[23D7]
R2318	RES_402	m39[23D7]
R2319	RES_402	m39[23D2]
R2320	RES_402	m39[23D7]
R2323	RES_402	m39[23D5]
R2326	RES_402	m39[23D6]
R2327	RES_402	m39[23D6]
R2343	RES_402	m39[23D1]
R2388	RES_402	m39[23A3]
R2389	RES_402	m39[38D5]
R2390	RES_402	m39[23B3]
R2395	RES_402	m39[23D7]
R2396	RES_402	m39[23D6]
R2397	RES_402	m39[23D6]
R2398	RES_402	m39[23D6]
R2399	RES_402	m39[23C1]
R2500	RES_603	m39[25A8]
R2501	RES_402	m39[25C8]
R2502	RES_402	m39[25D8]
R2600	RES_402	m39[26C7]
R2606	RES_402	m39[26C7]
R2607	RES_402	m39[26C8]
R2609	RES_402	m39[26D7]
R2611	RES_402	m39[26D5]
R2612	RES_402	m39[26D5]
R2622	RES_402	m39[26D4]
R2623	RES_402	m39[26D2]
R2624	RES_402	m39[26D2]
R2625	RES_402	m39[26D2]
R2626	RES_402	m39[26D2]
R2627	RES_402	m39[26D2]
R2628	RES_402	m39[26D2]
R2629	RES_402	m39[26D2]
R2630	RES_402	m39[26D2]
R2631	RES_402	m39[26D2]
R2632	RES_402	m39[26D2]
R2633	RES_402	m39[26D2]
R2634	RES_402	m39[26D2]
R2636	RES_402	m39[26D2]
R2637	RES_402	m39[26D2]
R2638	RES_402	m39[26D2]
R2639	RES_402	m39[26D2]
R2640	RES_402	m39[26C2]
R2641	RES_402	m39[26C2]
R2642	RES_402	m39[26C2]
R2643	RES_402	m39[26C2]
R2650	RES_402	m39[26C4]
R2651	RES_402	m39[26C1]
R2696	RES_402	m39[26B4]
R2697	RES_402	m39[26C3]
R2698	RES_402	m39[26C5]
R2699	RES_402	m39[26C5]
R2718	RES_402	m39[27B7]
R2719	RES_402	m39[27B7]
R2800	RES_402	m39[28C7]
R2801	RES_402	m39[28C7]
R2900	RES_402	m39[29A3]
R3001	RES_402	m39[30D4]
R3009	RES_402	m39[30D4]
R3011	RES_402	m39[30C4]
R3025	RES_402	m39[30C4]
R3035	RES_402	m39[30B4]
R3100	RES_402	m39[31C5]
R3101	RES_402	m39[31C5]
R3300	RES_402	m39[33B6]
R3301	RES_402	m39[33B7]
R3302	RES_402	m39[33D4]
R3303	RES_402	m39[33C4]
R3304	RES_402	m39[33C7]
R3400	RES_402	m39[34C5]
R3401	RES_402	m39[34B5]
R3402	RES_402	m39[34B5]
R3403	RES_402	m39[34C5]
R3404	RES_402	m39[34C5]
R3405	RES_402	m39[34C5]
R3406	RES_402	m39[34C5]
R3407	RES_402	m39[34B5]
R3408	RES_402	m39[34B5]
R3409	RES_402	m39[34B5]
R3410	RES_402	m39[34B5]
R3411	RES_402	m39[34B5]
R3412	RES_402	m39[34B5]
R3413	RES_402	m39[34B5]
R3414	RES_402	m39[34B5]
R3415	RES_402	m39[34B5]
R3416	RES_402	m39[34B5]
R3417	RES_402	m39[34B5]
R3418	RES_402	m39[34B5]
R3419	RES_402	m39[34A5]
R3420	RES_402	m39[34A5]
R3421	RES_402	m39[34A5]
R3422	RES_402	m39[34A5]
R3423	RES_402	m39[34A5]
R3424	RES_402	m39[34A5]
R3429	RES_402	m39[34C1]
R3430	RES_402	m39[34C1]
R3431	RES_402	m39[34C1]
R3432	RES_402	m39[34C1]
R3433	RES_402	m39[34C1]
R3434	RES_402	m39[34C1]
R3435	RES_402	m39[34C1]
R3436	RES_402	m39[34C1]
R3437	RES_402	m39[34C1]
R3438	RES_402	m39[34C1]
R3439	RES_402	m39[34C1]
R3440	RES_402	m39[34C1]
R3441	RES_402	m39[34C1]
R3442	RES_402	m39[34C1]
R3443	RES_402	m39[34B1]
R3444	RES_402	m39[34B1]
R3445	RES_402	m39[34B1]
R3446	RES_402	m39[34B1]
R3451	RES_402	m39[34C4]
R3452	RES_402	m39[34B7]
R3453	RES_402	m39[34B8]

R3454	RES_402	m39[34B7]
R3455	RES_402	m39[34B8]
R3456	RES_402	m39[34B7]
R3457	RES_402	m39[34B7]
R3458	RES_402	m39[34B8]
R3459	RES_402	m39[34A7]
R3460	RES_402	m39[34A7]
R3461	RES_402	m39[34A7]
R3462	RES_402	m39[34A8]
R3463	RES_402	m39[34A7]
R3470	RES_402	m39[34A5]
R3471	RES_402	m39[34A5]
R3485	RES_402	m39[34D1]
R3486	RES_402	m39[34D1]
R3487	RES_402	m39[34D1]
R3488	RES_402	m39[34D1]
R3489	RES_402	m39[34D2]
R3490	RES_402	m39[34D2]
R3491	RES_402	m39[34D2]
R3492	RES_402	m39[34D2]
R3493	RES_402	m39[34D7]
R3494	RES_402	m39[34D7]
R3495	RES_402	m39[34D7]
R3496	RES_402	m39[34C5]
R3497	RES_402	m39[34D4]
R3498	RES_402	m39[34D5]
R3499	RES_402	m39[34D5]
R3824	RES_402	m39[38D2]
R3851	RES_402	m39[38D3]
R3852	RES_402	m39[38D2]
R3853	RES_402	m39[38D2]
R3857	RES_402	m39[38B3]
R3858	RES_402	m39[38B3]
R3859	RES_402	m39[38B2]
R3897	RES_402	m39[38B7]
R3899	RES_402	m39[38B5]
R4101	RES_402	m39[41D7]
R4102	RES_402	m39[41C7]
R4103	RES_402	m39[41C2]
R4104	RES_402	m39[41C2]
R4105	RES_402	m39[41C2]
R4106	RES_402	m39[41C2]
R4117	RES_402	m39[41B2]
R4118	RES_402	m39[41B2]
R4119	RES_402	m39[41B2]
R4120	RES_402	m39[41B2]
R4122	RES_402	m39[41A3]
R4123	RES_402	m39[41A2]
R4130	RES_402	m39[41C4]
R4131	RES_402	m39[41C4]
R4150	RES_402	m39[41C8]
R4151	RES_402	m39[41D7]
R4200	RES_402	m39[42D2]
R4201	RES_402	m39[42C2]
R4202	RES_402	m39[42D6]
R4300	RES_402	m39[43D7]
R4301	RES_603	m39[43D2]
R4302	RES_603	m39[43D2]
R4303	RES_603	m39[43D1]
R4304	RES_603	m39[43D1]
R4350	RES_402	m39[43C7]
R4351	RES_402	m39[43C7]
R4352	RES_402	m39[43C7]
R4353	RES_402	m39[43C7]
R4354	RES_402	m39[43C7]
R4355	RES_402	m39[43C7]
R4356	RES_402	m39[43C7]
R4357	RES_402	m39[43B7]
R4402	RES_402	m39[44B3]
R4403	RES_402	m39[44B5]
R4404	RES_402	m39[44A7]
R4407	RES_402	m39[44A7]
R4409	RES_402	m39[44B3]
R4410	RES_402	m39[44D2]
R4411	RES_402	m39[44D6]
R4412	RES_402	m39[44C1]
R4413	RES_402	m39[44C3]
R4414	RES_402	m39[44C3]
R4416	RES_402	m39[44A5]
R4450	RES_402	m39[44B3]
R4451	RES_402	m39[44B3]
R4452	RES_402	m39[44B3]
R4453	RES_402	m39[44B3]
R4454	RES_402	m39[44B3]
R4455	RES_402	m39[44B3]
R4602	RES_2512	m39[46D5]
R4650	RES_402	m39[46C8]
R4651	RES_402	m39[46C7]
R4652	RES_402	m39[46B8]
R4653	RES_402	m39[46B7]
R4654	RES_402	m39[46B7]
R4656	RES_2512	m39[46D6]
R4660	RES_402	m39[46C7]
R4661	RES_402	m39[46C7]
R4662	RES_402	m39[46B7]
R4663	RES_402	m39[46B7]
R4664	RES_402	m39[46B7]
R4690	RES_402	m39[46A7]
R4712	RES_402	m39[47C6]
R4713	RES_402	m39[47C6]
R4722	RES_402	m39[47B6]
R4723	RES_402	m39[47B6]
R4732	RES_402	m39[47A6]
R4733	RES_402	m39[47A6]
R4734	RES_805	m39[47A6]
R4735	RES_805	m39[47C6]
R4736	RES_805	m39[47D6]
R4742	RES_402	m39[47C2]
R4743	RES_402	m39[47C2]
R4746	RES_805	m39[47D2]
R4754	RES_402	m39[47C2]
R4755	RES_402	m39[47B2]
R5300	RES_402	m39[53C3]
R5301	RES_402	m39[53B3]
R5302	RES_402	m39[53B4]
R5303	RES_402	m39[53B4]
R5304	RES_402	m39[53C6]
R5801	RES_402	m39[58C2]
R5802	RES_402	m39[58C2]
R5803	RES_402	m39[58C2]
R5808	RES_402	m39[59C3]
R5809	RES_402	m39[58C2]
R5815	RES_402	m39[59B3]
R5817	RES_402	m39[59B3]

R5818	RES_402	m39[59B3]
R5819	RES_402	m39[59B3]
R5821	RES_402	m39[59B3]
R5822	RES_402	m39[59B3]
R5823	RES_402	m39[59B3]
R5824	RES_402	m39[59B3]
R5825	RES_402	m39[59B3]
R5826	RES_402	m39[59B3]
R5827	RES_402	m39[59C5]
R5828	RES_402	m39[59B3]
R5829	RES_402	m39[59C3]
R5830	RES_402	m39[59C3]
R5831	RES_402	m39[59C3]
R5832	RES_402	m39[59C3]
R5833	RES_402	m39[59B3]
R5898	RES_402	m39[58C2]
R5899	RES_402	m39[58D3]
R5900	RES_402	m39[59D7]
R5901	RES_402	m39[59D6]
R5902	RES_402	m39[59D7]
R5903	RES_402	m39[59D2]
R5904	RES_402	m39[59D2]
R5905	RES_402	m39[59D2]
R5906	RES_402	m39[59D2]
R5907	RES_402	m39[59B7]
R5910	RES_402	m39[59D2]
R5911	RES_402	m39[59D2]
R5912	RES_402	m39[59D2]
R5913	RES_402	m39[59D2]
R5914	RES_402	m39[59C2]
R5915	RES_402	m39[59C2]
R5916	RES_402	m39[59C2]
R5917	RES_402	m39[59C2]
R5919	RES_402	m39[59B4]
R5920	RES_402	m39[59B5]
R5921	RES_402	m39[59B5]
R5922	RES_402	m39[59B5]
R5923	RES_402	m39[59B5]
R5924	RES_402	m39[59B5]
R5925	RES_402	m39[59A1]
R5927	RES_402	m39[59A3]
R5930	RES_402	m39[59B6]
R5931	RES_402	m39[59B6]
R5932	RES_402	m39[59A7]
R5933	RES_402	m39[59A7]
R5934	RES_402	m39[59A6]
R5935	RES_402	m39[59A6]
R5940	RES_402	m39[59A3]
R5941	RES_402	m39[59A5]
R5942	RES_402	m39[59A4]
R5995	RES_402	m39[59A5]
R6100	RES_402	m39[61C4]
R6101	RES_402	m39[61C5]
R6102	RES_402	m39[61C5]
R6103	RES_402	m39[61C6]
R6104	RES_402	m39[61B6]
R6301	RES_402	m39[63D4]
R6302	RES_402	m39[63D4]
R6303	RES_402	m39[63C2]
R6306	RES_402	m39[63C2]
R6307	RES_402	m39[63C5]
R6309	RES_402	m39[63C5]
R6399	RES_402	m39[63D2]
R6500	RES_402	m39[65C7]
R6501	RES_402	m39[65A7]
R6502	RES_1206	m39[65D6]
R6503	RES_805	m39[65D5]
R6504	RES_805	m39[65C5]
R6505	RES_805	m39[65D5]
R6506	RES_402	m39[65D6]
R6507	RES_805	m39[65B5]
R6508	RES_805	m39[65B5]
R6509	RES_805	m39[65B5]
R6510	RES_1206	m39[65B6]
R6511	RES_402	m39[65B6]
R6512	RES_805	m39[65C5]
R6513	RES_805	m39[65B5]
R6514	RES_805	m39[65B4]
R6515	RES_805	m39[65C4]
R6580	RES_402	m39[65B8]
R6581	RES_402	m39[65B7]
R6597	RES_402	m39[65A7]
R6598	RES_402	m39[65A7]
R6599	RES_402	m39[65C7]
R6600	RES_402	m39[66C7]
R6601	RES_805	m39[66D5]
R6602	RES_805	m39[66C4]
R6603	RES_805	m39[66D5]
R6604	RES_1206	m39[66D5]
R6605	RES_402	m39[66D6]
R6606	RES_805	m39[66C5]
R6607	RES_805	m39[66C3]
R6680	RES_402	m39[66D8]
R6681	RES_402	m39[66D7]
R6697	RES_402	m39[66C8]
R6698	RES_402	m39[66C8]
R6700	RES_402	m39[67C6]
R6702	RES_402	m39[67C4]
R6703	RES_402	m39[67C4]
R6704	RES_805	m39[67C2]
R6705	RES_805	m39[67C3]
R6798	RES_402	m39[67B6]
R6799	RES_402	m39[67B6]
R6800	RES_402	m39[68C6]
R6801	RES_805	m39[68B5]
R6802	RES_402	m39[68A5]
R6803	RES_402	m39[68A4]
R6807	RES_402	m39[68D7]
R6808	RES_402	m39[68D3]
R6810	RES_402	m39[68A3]
R6811	RES_402	m39[68A3]
R6812	RES_402	m39[68B7]
R6813	RES_402	m39[68A7]
R6814	RES_402	m39[68A7]
R6815	RES_402	m39[68A7]
R6816	RES_402	m39[68B4]
R6817	RES_402	m39[68B4]
R6818	RES_805	m39[68B4]
R7208	RES_402	m39[72A4]
R7212	RES_402	m39[72B8]
R7213	RES_402	m39[72B7]
R7214	RES_402	m39[72C5]
R7215	RES_402	m39[72C7]
R7216	RES_402	m39[72C5]

www.teknisi-indonesia.com

R7217	RES_402	m39[72B5]
R7218	RES_402	m39[72A5]
R7219	RES_402	m39[72B4]
R7302	RES_402	m39[73A3]
R7313	RES_402	m39[73C2]
R7314	RES_402	m39[73C2]
R7400	RES_402	m39[74B4]
R7404	RES_402	m39[74C4]
R7405	RES_402	m39[74D3]
R7407	RES_402	m39[74B4]
R7408	RES_402	m39[74A4]
R7409	RES_402	m39[74B4]
R7410	RES_805	m39[74D2]
R7411	RES_805	m39[74C2]
R7412	RES_805	m39[74D2]
R7413	RES_402	m39[74B4]
R7414	RES_805	m39[74B7]
R7415	RES_805	m39[74B8]
R7416	RES_805	m39[74C7]
R7417	RES_805	m39[74C8]
R7418	RES_402	m39[74B6]
R7419	RES_402	m39[74B6]
R7420	RES_402	m39[74D4]
R7421	RES_402	m39[74D8]
R7422	RES_402	m39[74D7]
R7423	RES_402	m39[74B6]
R7424	RES_402	m39[74B6]
R7425	RES_402	m39[74A5]
R7426	RES_402	m39[74A4]
R7427	RES_402	m39[74A4]
R7429	RES_805	m39[74C2]
R7430	RES_402	m39[74C1]
R7431	RES_402	m39[74C2]
R7432	RES_402	m39[74B1]
R7500	RES_402	m39[75C2]
R7501	RES_603	m39[75C2]
R7502	RES_1206	m39[75B2]
R7503	RES_1206	m39[75D2]
R7504	RES_402	m39[75C1]
R7505	RES_402	m39[75B2]
R7506	RES_603	m39[75B2]
R7507	RES_402	m39[75B1]
R7508	RES_402	m39[75B8]
R7509	RES_402	m39[75B8]
R7510	RES_402	m39[75B6]
R7511	RES_402	m39[75B7]
R7512	RES_402	m39[75D7]
R7513	RES_402	m39[75B7]
R7514	RES_402	m39[75B8]
R7515	RES_402	m39[75B4]
R7516	RES_402	m39[75B4]
R7517	RES_402	m39[75B5]
R7518	RES_402	m39[75B5]
R7519	RES_402	m39[75C7]
R7520	RES_402	m39[75D7]
R7521	RES_402	m39[75D7]
R7522	RES_402	m39[75A5]
R7523	RES_402	m39[75A5]
R7526	THERMISTER_402	m39[75C8]
R7527	RES_402	m39[75C8]
R7528	RES_402	m39[75A5]
R7529	RES_402	m39[75A5]
R7530	RES_402	m39[75B4]
R7531	THERMISTER_0603-LF	m39[75B4]
R7590	RES_402	m39[75C7]
R7591	RES_402	m39[75C7]
R7592	RES_402	m39[75C7]
R7593	RES_402	m39[75C7]
R7594	RES_402	m39[75C7]
R7595	RES_402	m39[75C7]
R7596	RES_402	m39[75D7]
R7597	RES_402	m39[76D6]
R7598	RES_402	m39[76C7]
R7599	RES_2512-1	m39[76D7]
R7600	RES_402	m39[76D3]
R7602	RES_402	m39[76D3]
R7603	RES_402	m39[76C3]
R7604	RES_402	m39[76C3]
R7605	RES_402	m39[76D4]
R7606	RES_402	m39[76D4]
R7607	RES_402	m39[76C3]
R7612	RES_402	m39[76B2]
R7620	RES_402	m39[76D2]
R7623	RES_402	m39[76D1]
R7630	RES_402	m39[76C8]
R7631	RES_402	m39[76C8]
R7632	RES_402	m39[76C7]
R7639	RES_402	m39[76B7]
R7640	RES_402	m39[76A7]
R7641	RES_402	m39[76A7]
R7642	RES_402	m39[76A6]
R7643	RES_1206	m39[76B5]
R7644	RES_1206	m39[76B4]
R7659	RES_402	m39[76D5]
R7669	RES_402	m39[76D4]
R7700	RES_402	m39[77D5]
R7701	RES_402	m39[77C5]
R7704	RES_402	m39[77C5]
R7705	RES_402	m39[77C5]
R7706	RES_402	m39[77C4]
R7707	RES_402	m39[77C3]
R7708	RES_402	m39[77C3]
R7710	RES_402	m39[77D5]
R7750	RES_402	m39[77A5]
R7751	RES_402	m39[77A5]
R7752	RES_402	m39[77A5]
R7753	RES_402	m39[77B7]
R7754	RES_402	m39[77B6]
R7755	RES_402	m39[77B5]
R7756	RES_402	m39[77B5]
R7757	RES_402	m39[77B6]
R7793	RES_402	m39[77D7]
R7794	RES_402	m39[77C7]
R7800	RES_402	m39[78C7]
R7801	RES_402	m39[78B7]
R7802	RES_402	m39[78B3]
R7803	RES_402	m39[78B3]
R7804	RES_1206	m39[78B4]
R7805	RES_402	m39[78B5]
R7812	RES_402	m39[78B3]
R7840	RES_402	m39[78C5]
R7892	RES_402	m39[78B7]
R7901	RES_402	m39[79C3]
R7902	RES_1206	m39[79C4]

R7903	RES_402	m39[79C3]
R7904	RES_402	m39[79C5]
R7905	RES_402	m39[79D7]
R7906	RES_402	m39[79A4]
R7910	RES_402	m39[79B2]
R7911	RES_402	m39[79B3]
R7912	RES_402	m39[79B3]
R7913	RES_402	m39[79A2]
R7914	RES_402	m39[79A3]
R7915	RES_402	m39[79A3]
R7940	RES_402	m39[79D5]
R7991	RES_402	m39[79C7]
R7992	RES_402	m39[79C7]
R7999	RES_402	m39[79C3]
R8000	RES_402	m39[80C3]
R8001	RES_402	m39[80C7]
R8002	RES_1206	m39[80C4]
R8003	RES_402	m39[80C3]
R8004	RES_402	m39[80C5]
R8005	RES_402	m39[80D7]
R8007	RES_402	m39[80A4]
R8010	RES_402	m39[80B2]
R8011	RES_402	m39[80B3]
R8012	RES_402	m39[80B3]
R8040	RES_402	m39[80C5]
R8092	RES_402	m39[80C7]
R8099	RES_402	m39[80C3]
R8101	RES_402	m39[81C3]
R8102	RES_1206	m39[81C4]
R8103	RES_402	m39[81C3]
R8104	RES_402	m39[81C5]
R8105	RES_402	m39[81D7]
R8107	RES_402	m39[81A4]
R8110	RES_402	m39[81B3]
R8140	RES_402	m39[81C5]
R8190	RES_402	m39[81C3]
R8191	RES_402	m39[81C7]
R8192	RES_402	m39[81C7]
R8198	RES_402	m39[81A5]
R8199	RES_402	m39[81A5]
R8300	RES_402	m39[83B4]
R8301	RES_402	m39[83C5]
R8302	RES_402	m39[83B5]
R8303	RES_402	m39[83C4]
R8495	RES_402	m39[84A2]
R8496	RES_402	m39[84A2]
R8497	RES_402	m39[84A2]
R8502	RES_402	m39[85D6]
R8503	RES_402	m39[85D7]
R8504	RES_402	m39[85D7]
R8505	RES_402	m39[85C7]
R8506	RES_402	m39[85C8]
R8507	RES_402	m39[85D7]
R8508	RES_402	m39[85C7]
R8510	RES_402	m39[85C5]
R8521	RES_402	m39[85C3]
R8522	RES_402	m39[85C3]
R8523	RES_402	m39[85C3]
R8524	RES_402	m39[85B3]
R8525	RES_402	m39[85B3]
R8526	RES_402	m39[85B3]
R8540	RES_402	m39[85C2]
R8554	RES_402	m39[85B7]
R8555	RES_402	m39[85B6]
R8556	RES_402	m39[85B6]
R8560	RES_402	m39[85A6]
R8561	RES_402	m39[85A7]
R8570	RES_402	m39[85A5]
R8585	RES_603	m39[85A3]
R8586	RES_402	m39[85A3]
R8588	RES_402	m39[85C5]
R8590	RES_402	m39[85C3]
R8591	RES_402	m39[85D3]
R8592	RES_402	m39[85D2]
R8593	RES_402	m39[85D3]
R8594	RES_402	m39[85D3]
R8596	RES_402	m39[85D3]
R8597	THERMISTER_0603-LF	m39[85D3]
R8598	RES_402	m39[85D2]
R8599	RES_1206	m39[85C4]
R8630	RES_603	m39[86C7]
R8710	RES_402	m39[87B8]
R8711	RES_402	m39[87A8]
R8712	RES_402	m39[87B7]
R8713	RES_402	m39[87A7]
R8720	RES_402	m39[87B4]
R8721	RES_402	m39[87A4]
R8722	RES_402	m39[87B4]
R8723	RES_402	m39[87A4]
R8730	RES_402	m39[87A3]
R8731	RES_402	m39[87A3]
R8732	RES_402	m39[87A3]
R8733	RES_402	m39[87A1]
R8800	RES_603	m39[88D7]
R8801	RES_402	m39[88A7]
R8802	RES_402	m39[88D4]
R8803	RES_402	m39[88D4]
R8804	RES_402	m39[88D4]
R8805	RES_402	m39[88C4]
R8806	RES_402	m39[88C4]
R8807	RES_402	m39[88C4]
R8808	RES_402	m39[88C4]
R8809	RES_402	m39[88C4]
R8810	RES_402	m39[88C4]
R8811	RES_402	m39[88B4]
R8812	RES_402	m39[88C4]
R8813	RES_402	m39[88D4]
R8830	RES_402	m39[88B4]
R8831	RES_402	m39[88B4]
R8832	RES_402	m39[88B4]
R8833	RES_402	m39[88B4]
R8850	RES_402	m39[88B4]
R8930	RES_402	m39[89C7]
R8931	RES_402	m39[89C7]
R8932	RES_402	m39[89C7]
R8933	RES_402	m39[89C7]
R8940	RES_402	m39[89B8]
R8941	RES_402	m39[89B8]
R8942	RES_402	m39[89B7]
R8943	RES_402	m39[89B7]
R8944	RES_402	m39[89B7]
R8945	RES_402	m39[89B7]
R8946	RES_402	m39[89B7]
R8947	RES_402	m39[89B7]

R8948	RES_402	m39[89A7]
R8949	RES_402	m39[89A7]
R8980	RES_402	m39[89C4]
R8981	RES_402	m39[89C4]
R8982	RES_402	m39[89C4]
R8983	RES_402	m39[89C4]
R8990	RES_402	m39[89B5]
R8991	RES_402	m39[89B4]
R8992	RES_402	m39[89B4]
R8993	RES_402	m39[89B4]
R8994	RES_402	m39[89B4]
R8995	RES_402	m39[89B4]
R8996	RES_402	m39[89B4]
R8997	RES_402	m39[89B4]
R8998	RES_402	m39[89A4]
R8999	RES_402	m39[89A4]
R9030	RES_402	m39[90C7]
R9031	RES_402	m39[90C7]
R9032	RES_402	m39[90C7]
R9033	RES_402	m39[90C7]
R9040	RES_402	m39[90B8]
R9041	RES_402	m39[90A8]
R9042	RES_402	m39[90B7]
R9043	RES_402	m39[90B7]
R9044	RES_402	m39[90B7]
R9045	RES_402	m39[90B7]
R9046	RES_402	m39[90B7]
R9047	RES_402	m39[90B7]
R9048	RES_402	m39[90A7]
R9049	RES_402	m39[90A7]
R9080	RES_402	m39[90C4]
R9081	RES_402	m39[90C4]
R9082	RES_402	m39[90C4]
R9083	RES_402	m39[90C4]
R9090	RES_402	m39[90B5]
R9091	RES_402	m39[90A4]
R9092	RES_402	m39[90B4]
R9093	RES_402	m39[90B4]
R9094	RES_402	m39[90B4]
R9095	RES_402	m39[90B4]
R9096	RES_402	m39[90B4]
R9097	RES_402	m39[90B4]
R9098	RES_402	m39[90A4]
R9099	RES_402	m39[90A4]
R9190	RES_402	m39[91D2]
R9191	RES_402	m39[91D2]
R9195	RES_402	m39[91A3]
R9202	RES_402	m39[92C6]
R9250	RES_402	m39[92C6]
R9350	RES_402	m39[93A8]
R9351	RES_402	m39[93A8]
R9370	RES_402	m39[93D1]
R9371	RES_402	m39[93D1]
R9372	RES_402	m39[93C1]
R9373	RES_402	m39[93C1]
R9390	RES_402	m39[93A1]
R9391	RES_402	m39[93A1]
R9400	RES_402	m39[94C8]
R9401	RES_402	m39[94C7]
R9410	RES_402	m39[94C6]
R9411	RES_402	m39[94C6]
R9450	RES_402	m39[94C2]
R9470	RES_402	m39[94C7]
R9472	RES_402	m39[94B3]
R9473	RES_402	m39[94B2]
R9474	RES_402	m39[94B2]
R9475	RES_402	m39[94B1]
R9490	RES_805	m39[94C6]
R9491	RES_805	m39[94D6]
R9700	RES_402	m39[97D7]
R9701	RES_402	m39[97D8]
R9702	RES_402	m39[97D7]
R9703	RES_402	m39[97D7]
R9704	RES_402	m39[97C7]
R9705	RES_402	m39[97C7]
R9706	RES_402	m39[97D8]
R9707	RES_402	m39[97C8]
R9708	RES_402	m39[97C7]
R9709	RES_402	m39[97C7]
R9710	RES_402	m39[97D2]
R9711	RES_402	m39[97D2]
R9712	RES_402	m39[97D2]
R9713	RES_402	m39[97C2]
R9714	RES_402	m39[97C2]
R9715	RES_402	m39[97C7]
R9716	RES_402	m39[97C8]
R9717	RES_402	m39[97C8]
R9720	RES_402	m39[97D1]
R9721	RES_402	m39[97D1]
R9722	RES_402	m39[97C2]
R9740	RES_402	m39[97A8]
R9741	RES_402	m39[97A8]
R9742	RES_402	m39[97A7]
R9750	RES_402	m39[97A3]
R9751	RES_402	m39[97A3]
RP2300	RPAK4P_SM-LF	m39[23D5]
RP3000	RPAK4P_SM-LF	m39[30B4 30C4 30D4 30D4]
RP3001	RPAK4P_SM-LF	m39[30C4 30A4 30A4 30D4]
RP3002	RPAK4P_SM-LF	m39[30A4 30A4 30A4 30D4]
RP3003	RPAK4P_SM-LF	m39[30C4 30C4 30C4 30D4]
RP3004	RPAK4P_SM-LF	m39[30C4 30C4 30D4]
RP3005	RPAK4P_SM-LF	m39[30B4 30A4 30A4 30D4]
RP3006	RPAK4P_SM-LF	m39[30B4 30B4 30A4 30D4]
RP3007	RPAK4P_SM-LF	m39[30C4 30C4 30C4 30C4]
RP3008	RPAK4P_SM-LF	m39[30C4 30C4 30C4 30C4]
RP3009	RPAK4P_SM-LF	m39[30B4 30B4 30C4 30C4]
RP3010	RPAK4P_SM-LF	m39[30B4 30B4 30B4 30B4]
RP3011	RPAK4P_SM-LF	m39[30B4 30A4 30B4 30B4]
RP7200	RPAK4P_SM-LF	m39[72A4]
SDF3800	PCB_STANDOFF	m39[38B2]
SDF3801	PCB_STANDOFF	m39[38A2]
SDF4700	PCB_STANDOFF	m39[47A2]
SDF4701	PCB_STANDOFF	m39[47A2]
SDF5300	PCB_STANDOFF	m39[53A5]
SDF5301	PCB_STANDOFF	m39[53A5]
SDF9400	PCB_STANDOFF	m39[94B6]
SDF9401	PCB_STANDOFF	m39[94A6]
SW2600	SWI_TACT_4SM_EVQPH_S M-LF	m39[26C6]
SW5900	SWI_TACT_4SM_EVQPH_S M-LF	m39[59D8]
SW5901	SWI_TACT_4SM_EVQPH_S M-LF	m39[59B8]
U600	74LC125_TSSOP	m39[6A7 6B7 6B7 6C7]

U601	SN74LVC1G04_SOT23-5	m39[6C7]
U1000	ADT7461_MSOP	m39[10D5]
U1200	NB_945GM_BGA	m39[12D5]
U1200	NB_945GM_BGA	m39[13D4]
U1200	NB_945GM_BGA	m39[14D5]
U1200	NB_945GM_BGA	m39[15D3 15D7]
U1200	NB_945GM_BGA	m39[16D2 16C8]
U1200	NB_945GM_BGA	m39[17D5]
U1200	NB_945GM_BGA	m39[18D4 18D7]
U2100	SB_ICH7M_BGA	m39[21D6]
U2100	SB_ICH7M_BGA	m39[22B7 22D3]
U2100	SB_ICH7M_BGA	m39[23D4]
U2100	SB_ICH7M_BGA	m39[24D4 24D7]
U2601	MC74VHC1G08_SOT23-5-LF	m39[26D5]
U2603	SN74LVC1G04_SOT23-5	m39[26A7]
U2698	MC74VHC1G08_SOT23-5-LF	m39[26C4]
U2699	MAX6816_SOT143	m39[26C5]
U3100	LREG_BD3533FVM_MSOP-8	m39[31C5]
U3301	CLK_GEN_CY284455_QFN	m39[33C5]
U4101	88E8053_QFN	m39[41D5]
U4102	EEPROM_M24C08_SO8	m39[41A3]
U4400	FW32306_TQFP	m39[44D5]
U4700	SWI_TPS2024_SOI	m39[47C8]
U5800	SMC_H8S2116_BGA	m39[58A8 58C3 58C6 58D6]
U5900	VDET_RN5VD_SOT23-5	m39[59D8]
U5940	VREF_REF3133_SOT23-3	m39[59A4]
U5999	COMPARATOR_LMV339_TS SOP	m39[59A6 59A6 59A8 59A8]
U6100	MAX6695_UMAX	m39[61C4]
U6301	FLASH_SST25VF016B_SO I_SOI	m39[63D3]
U6700	TPM_TSSOP	m39[67C5]
U6800	AUDIO_STAC9220_LQFP	m39[68D5]
U7200	MAX9714_QFN-LF	m39[72C5]
U7500	ISL6262_QFN	m39[75C6]
U7501	INA138_SOT23-5-LF	m39[76D7]
U7600	OPAMP_LMV2011_SOT23-5	m39[76D3]
U7700	LTC3411_MSOP-LF	m39[77D5]
U7710	MC74VHC1G08_SOT23-5-LF	m39[77C7]
U7711	MC74VHC1G08_SOT23-5-LF	m39[77B7]
U7712	MC74VHC1G08_SOT23-5-LF	m39[77B7]
U7750	LTC3412_TSSOP-LF	m39[77B5]
U7800	ISL6549_QFN	m39[78C6]
U7900	ISL6549_QFN	m39[79D6]
U7901	COMPARATOR_LM339A_SO I-LF	m39[79A5]
U7901	COMPARATOR_LM339A_SO I-LF	m39[80A4]
U7901	COMPARATOR_LM339A_SO I-LF	m39[81A5]
U7910	COMPARATOR_LM339A_SO I-LF	m39[79A3 79B3]
U7910	COMPARATOR_LM339A_SO I-LF	m39[80B2]
U7910	COMPARATOR_LM339A_SO I-LF	m39[81B3]
U8000	ISL6549_QFN	m39[80D6]
U8100	ISL6549_QFN	m39[81D6]
U8400	ATI_M56P_BGA	m39[84C8 84D4]
U8400	ATI_M56P_BGA	m39[86D4]
U8400	ATI_M56P_BGA	m39[87D2 87D6]
U8400	ATI_M56P_BGA	m39[91D4]
U8400	ATI_M56P_BGA	m39[93C4]
U8500	ISL6269_QFN	m39[85D6]
U8550	FAN2558_SOT23-6-LF	m39[85B7]
U8560	74LVC1G125LF_SOT23-5	m39[85A6]
U8580	LT3483_TSOT23-6	m39[85A4]
U8595	OPAMP_LMV2011_SOT23-5	m39[85D2]
U8900	SGRAM_16MX32_GDDR3_1 36H_FBGA	m39[89D6 89B6]
U8950	SGRAM_16MX32_GDDR3_1 36H_FBGA	m39[89D3 89B3]
U9000	SGRAM_16MX32_GDDR3_1 36_FBGA	m39[90D6 90B6]
U9050	SGRAM_16MX32_GDDR3_1 36_FBGA	m39[90D3 90B3]
U9470	MC74VHC1G08_SOT23-5-LF	m39[94B2]
U9750	74AHC1G32_SM-LF	m39[97A4]
U9751	74AHC1G32_SM-LF	m39[97A4]
VR6800	LREG_TPS79501_SOT223-6	m39[68A4]
XC7200	MTGHOLE	m39[72B3]
XW601	SHORT_SM	m39[6C2]
XW602	SHORT_SM	m39[6C2]
XW604	SHORT_SM	m39[6A5]
XW605	SHORT_SM	m39[6A5]
XW5800	SHORT_SM	m39[58B3]
XW5900	SHORT_SM	m39[59B1]
XW6800	SHORT_SM	m39[74A4]
XW7201	SHORT_SM	m39[72B2]
XW7300	SHORT_SM	m39[73C5]
XW7400	SHORT_SM	m39[74D2]
XW7500	SHORT_SM	m39[75A6]
XW7501	SHORT_SM	m39[75B2]
XW7502	SHORT_SM	m39[75B1]
XW7503	SHORT_SM	m39[75D2]
XW7504	SHORT_SM	m39[75D1]
XW7598	SHORT_SM	m39[76D7]
XW7700	SHORT_SM	m39[77C4]
XW7750	SHORT_SM	m39[77A5]
XW7800	SHORT_SM	m39[78B6]
XW7900	SHORT_SM	m39[79C6]
XW8000	SHORT_SM	m39[80C6]
XW8100	SHORT_SM	m39[81C6]
XW8500	SHORT_SM	m39[85C6]
XW8715	SHORT_SM	m39[87A7]
XW8725	SHORT_SM	m39[87A4]
XW9135	SHORT_SM	m39[91A4]
XW9140	SHORT_SM	m39[91A4]
XW9300	SHORT_SM	m39[93C7]
XW9305	SHORT_SM	m39[93C7]
XW9310	SHORT_SM	m39[93C7]
XW9314	SHORT_SM	m39[93C7]
XW9320	SHORT_SM	m39[93B7]
XW9324	SHORT_SM	m39[93B7]

www.teknisi-indonesia.com

XW9330	SHORT_SM	m39[93B7]
XW9345	SHORT_SM	m39[93A7]
Y2600	CRYSTAL_4PIN_SM-LF	m39[26D8]
Y3301	CRYSTAL_5X3.2-SM	m39[33C7]
Y4101	CRYSTAL_4PIN_SM-3	m39[41B5]
Y4400	CRYSTAL_HC49-USMD	m39[44D2]
Y5800	CRYSTAL_SM-3	m39[59B8]
Y6700	CRYSTAL_4PIN_SM-LF	m39[59B7]
ZH500	HOLE_VIA	m39[5C1]
ZH501	HOLE_VIA	m39[5C1]
ZH502	HOLE_VIA	m39[5C1]
ZH503	HOLE_VIA	m39[5C1]
ZH504	HOLE_VIA	m39[5B1]
ZH505	HOLE_VIA	m39[5B1]
ZH506	HOLE_VIA	m39[5B1]
ZH507	HOLE_VIA	m39[5B1]
ZH508	HOLE_VIA	m39[5B1]
ZH509	HOLE_VIA	m39[5B1]
ZH510	HOLE_VIA	m39[5C1]
ZH511	HOLE_VIA	m39[5C1]
ZH512	HOLE_VIA	m39[5C1]
ZH513	HOLE_VIA	m39[5C1]
ZH514	HOLE_VIA	m39[5B1]
ZH515	HOLE_VIA	m39[5B1]
ZH516	HOLE_VIA	m39[5B1]
ZH517	HOLE_VIA	m39[5B1]
ZH518	HOLE_VIA	m39[5B1]
ZH519	HOLE_VIA	m39[5B1]
ZH520	HOLE_VIA	m39[5C1]
ZH521	HOLE_VIA	m39[5C1]
ZH522	HOLE_VIA	m39[5C1]
ZH523	HOLE_VIA	m39[5C1]
ZH524	HOLE_VIA	m39[5B1]
ZH525	HOLE_VIA	m39[5B1]
ZH526	HOLE_VIA	m39[5B1]
ZH527	HOLE_VIA	m39[5B1]
ZH528	HOLE_VIA	m39[5B1]
ZH529	HOLE_VIA	m39[5B1]
ZH601	MTGHOLE	m39[6A3]
ZH602	MTGHOLE	m39[6A3]
ZH603	MTGHOLE	m39[6A3]
ZH606	MTGHOLE	m39[6A1]
ZH607	MTGHOLE	m39[9D4]
ZH608	MTGHOLE	m39[9D3]
ZH609	MTGHOLE	m39[9D2]
ZH610	MTGHOLE	m39[9D2]

111

www.teknisi-indonesia.com